iiyama
Vision&Technology

USER MANUAL

ProLite

LCD Monitor

ENGLISH

ProLite T2451MTS
ProLite T2452MTS

Thank you very much for choosing the iiyama LCD monitor.
We recommend that you take a few minutes to read carefully through this brief but comprehensive manual before installing and switching on the monitor. Please keep this manual in a safe place for your future reference.

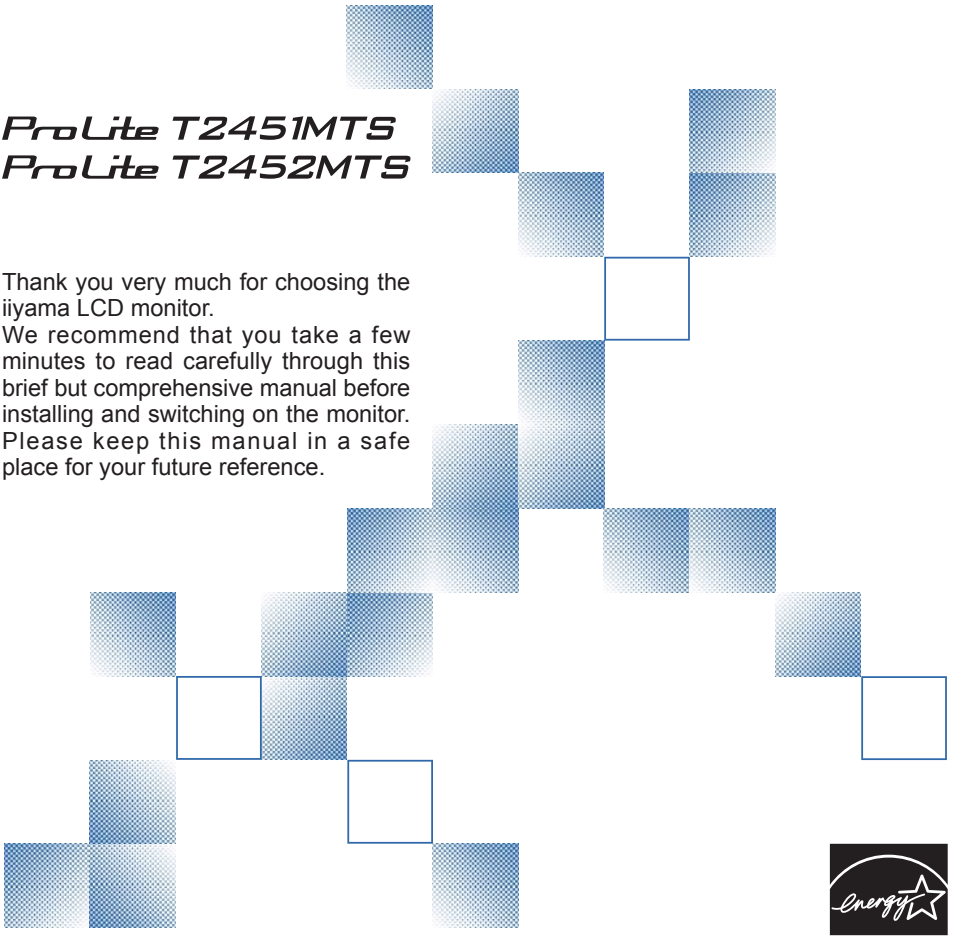

ENERGY STAR

iiyama | Servicecard

Dear user, we congratulate you on the purchase of your iiyama LCD.

For details on warranty and locally used pixel policies that apply directly after installation of your product please check the iiyama website.

To report a fault, please contact your local support centre found at www.iiyama.com/service

Things to check before you call the iiyama information line

| if the power cable is connected securely and turned on?

| if the display has been turned on?

| if the signal cable is connected securely and the correct input selected?

| if the computer has been restarted with the display connected?

| if the graphics card is correctly installed with the latest drivers possible?

| if the correct native resolution has been selected via 'Display Properties'?

| If the R/G/B signal configuration is correct?

| if the displays On Screen Menu is shown?

| if the correct brightness and contrast settings have been set?

| if given display tolerances and compatibility have been considered?

| if via the On Screen Menu you have performed a Factory Reset/Recall?

Before reporting the screen defect, please prepare the following information/evidence:

| model number *

| purchase receipt and serial number *

| name and address for collection

| telephone/fax number, for availability during the day

| convenient collection date (date, time)

| short description of the defect

Important Note:

If there is no fault found in the collected equipment after inspection, the transferring party shall incur charges for transport and administration.

If you have checked all of the above and there is still no picture, call our information line for assistance in your country.

* see the identification plate on the back of the case.

CE MARKING DECLARATION OF CONFORMITY

This LCD monitor complies with the requirements of the EC Directive 2004/108/EC “EMC Directive” , 2006/95/EC “Low Voltage Directive” and 2009/125/EC “ErP Directive”.
The electro-magnetic susceptibility has been chosen at a level that gives correct operation in residential areas, business and light industrial premises and small-scale enterprises, inside as well as outside of the buildings. All places of operation are characterised by their connection to the public low voltage power supply system.

IIYAMA CORPORATION: Breguetlaan 8, 1438BC Oude Meer The Netherlands

We recommend recycling of used product. Please contact your dealer or iiyama service center. Recycle information is obtained via the Internet, using the address:
http://www.iiyama.com
You can access the Web page of different countries from there.

- We reserve the right to change specifications without notice.
- All trademarks used in this user manual are the property of their respective owners.
- As an ENERGY STAR® Partner, iiyama has determined that this product meets the ENERGY STAR® guidelines for energy efficiency.

ENGLISH

TABLE OF CONTENTS

FOR YOUR SAFETY....1
- SAFETY PRECAUTIONS....1
- SPECIAL NOTES ON LCD MONITORS....3
- CUSTOMER SERVICE....3
- CLEANING....3

BEFORE YOU OPERATE THE MONITOR....4
- FEATURES....4
- CHECKING THE CONTENTS OF THE PACKAGE....4
- CONTROLS AND CONNECTORS....5
- CONNECTING YOUR MONITOR....6
- COMPUTER SETTING....7
- ADJUSTING THE VIEWING ANGLE....7

OPERATING THE MONITOR....8
- ADJUSTMENT MENU CONTENTS....9
- SCREEN ADJUSTMENTS....16
- POWER MANAGEMENT FEATURE....19

TROUBLE SHOOTING....20

RECYCLING INFORMATION....21

APPENDIX....22
- SPECIFICATIONS....22
- DIMENSIONS....23
- COMPLIANT TIMING....23

FOR YOUR SAFETY

SAFETY PRECAUTIONS

WARNING

STOP OPERATING THE MONITOR IF YOU ARE AWARE OF ANY PROBLEMS

If you notice any abnormal phenomena such as smoke, strange sounds or fumes, unplug the monitor and contact your dealer or iiyama service center immediately. Further use may be dangerous and can cause fire or electric shock.

NEVER REMOVE THE CABINET

High voltage circuits are inside the monitor. Removing the cabinet may expose you to the danger of fire or electric shock.

DO NOT PUT ANY OBJECT INTO THE MONITOR

Do not put any solid objects or liquids such as water into the monitor. In case of an accident, unplug your monitor immediately and contact your dealer or iiyama service center. Using the monitor with any object inside may cause fire, electric shock or damage.

INSTALL THE MONITOR ON A FLAT, STABLE SURFACE

The monitor may cause an injury if it falls or is dropped.

DO NOT USE THE MONITOR NEAR WATER

Do not use where water may be splashed or spilt onto the monitor as it may cause fire or electric shock.

OPERATE UNDER THE SPECIFIED POWER SUPPLY

Be sure to operate the monitor only with the specified power supply. Use of an incorrect voltage will cause malfunction and may cause fire or electric shock.

PROTECT THE CABLES

Do not pull or bend the power cable and signal cable. Do not place the monitor or any other heavy objects on the cables. If damaged, the cables may cause fire or electric shock.

ADVERSE WEATHER CONDITIONS

It is advisable not to operate the monitor during a heavy thunder storm as the continual breaks in power may cause malfunction. It is also advised not to touch the plug in these circumstances as it may cause electric shock.

CAUTION

INSTALLATION LOCATION

Do not install the monitor where sudden temperature changes may occur, or in humid, dusty or smoky areas as it may cause fire, electric shock or damage. You should also avoid areas where the sun shines directly on the monitor.

DO NOT PLACE THE MONITOR IN A HAZARDOUS POSITION

The monitor may topple and cause injury if not suitably located. Please also ensure that you do not place any heavy objects on the monitor, and that all cables are routed such that children may not pull the cables and possibly cause injury.

MAINTAIN GOOD VENTILATION

Ventilation slots are provided to keep the monitor from overheating. Covering the slots may cause fire. To allow adequate air circulation, place the monitor at least 10 cm (or 4 inches) from any walls.

Do not remove the tilt stand when operating the monitor. Ventilation slots on the back of the cabinet will be blocked and the monitor may overheat if the stand is removed. This may cause fire or damage. Operating the monitor on its back, side, upside down or on a carpet or any other soft material may also cause damage.

DISCONNECT THE CABLES WHEN YOU MOVE THE MONITOR

When you move the monitor, turn off the power switch, unplug the monitor and be sure the signal cable is disconnected. If you do not disconnect them, it may cause fire or electric shock.

UNPLUG THE MONITOR

If the monitor is not in use for a long period of time it is recommended that it is left unplugged to avoid accidents.

HOLD THE PLUG WHEN DISCONNECTING

To disconnect the power cable or signal cable, always pull it by the plug. Never pull on the cable itself as this may cause fire or electric shock.

DO NOT TOUCH THE PLUG WITH WET HANDS

Pulling or inserting the plug with wet hands may cause electric shock.

WHEN YOU INSTALL THE MONITOR ON YOUR COMPUTER

Be sure the computer is strong enough to hold the weight of the monitor, otherwise, you may damage your computer.

DO NOT USE THE MONITOR FOR 24-HOURS CONTINUOUSLY

The monitor is not designed to work for 24-hours continuously, do not use the monitor for 24-hours continuously.

OTHERS

ERGONOMIC RECOMMENDATIONS

To eliminate eye fatigue, do not operate the monitor against a bright background or in a dark room. For optimal viewing comfort, the monitor should be just below eye level and 40-60 cm (16-24 inches) away from your eyes. When using the monitor over a prolonged time, a ten minute break every hour is recommended as looking at the screen continuously can cause eye strain.

SPECIAL NOTES ON LCD MONITORS

The following symptoms are normal with LCD monitors and do not indicate a problem.

NOTE

- When you first turn on the LCD monitor, the picture may not fit in the display area because of the type of computer that is used. In this case, adjust the picture position to the correct position.
- Due to the nature of the backlight, the screen may flicker during initial use. Turn off the Power Switch and then turn it on again to make sure the flicker disappears.
- You may find slightly uneven brightness on the screen depending on the desktop pattern you use.
- Due to the nature of the LCD screen, an afterimage of the previous screen may remain after switching the image, when the same image is displayed for hours. In this case, the screen can be recovered slowly by changing the image or turning off the Power Switch for some hours.
- Contact your dealer or iiyama service center for the backlight replacement when the screen is dark, flickering or not lighting up. Never attempt to replace it by yourself.

CUSTOMER SERVICE

NOTE

- If you have to return your unit for service and the original packaging has been discarded, please contact your dealer or iiyama service center for advice or replacement packaging.

CLEANING

WARNING

- If you drop any materials or liquids such as water into the monitor when cleaning, unplug the power cable immediately and contact your dealer or iiyama service center.

CAUTION

- For safety reasons, turn off the power switch and unplug the monitor before you clean it.

NOTE

- To protect the LCD panel, do not scratch or rub the screen with a hard object.
- Never use any of the following strong solvents. These will damage the cabinet and the LCD screen.

Thinner	Spray-type cleaner
Benzine	Wax
Abrasive cleaner	Acid or Alkaline solvent

- Touching the cabinet with any product made from rubber or plastic for a long time may cause degeneration or loss of paint on the cabinet.

CABINET Stains can be removed with a cloth lightly moistened with a mild detergent solvent. Then wipe the cabinet with a soft dry cloth.

LCD SCREEN Periodic cleaning with a soft dry cloth is recommended.
Don't use tissue paper etc. because these will damage the LCD screen.

BEFORE YOU OPERATE THE MONITOR

FEATURES

- **Supports Resolutions up to 1920 × 1080**
- **High Contrast 1000:1 (Typical), ACR Function Available / Brightness 260cd/m^2 (Typical), Quick Response Time 5ms (Typical)**
- **X-Res Technology**
- **Digital Character Smoothing**
- **Automatic Set-up**
- **Stereo Speakers**
  2 × 2W Stereo Speakers
- **Plug & Play VESA DDC2B Compliant**
  Windows® XP/Vista/7 Compliant
- **Power Management (ENERGY STAR® VESA DPMS Compliant)**
- **VESA Mounting Standard (100mm×100mm) Compliant**
- **Keyhole for Security Lock**

CHECKING THE CONTENTS OF THE PACKAGE

The following accessories are included in your package. Check to see if they are enclosed with the monitor. If anything is missing or damaged, please contact your local iiyama dealer or regional iiyama office.

- Power Cable*
- D-Sub Signal Cable
- DVI-D Signal Cable
- USB Cable
- Audio Cable
- Touch Pen (Stored in the Cabinet)
- Safety Guide
- Quick Start Guide

CAUTION * The rating of the Power Cable enclosed in 120V area is 10A/125V. If you are using a power supply higher than this rating, then a power cable with a rating of 10A/250V must be used. However, all guarantees and warranties are void for any problems or damage caused by a power cable not supplied by iiyama.

CONTROLS AND CONNECTORS

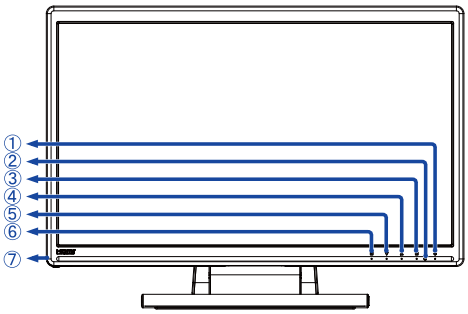

<Front>

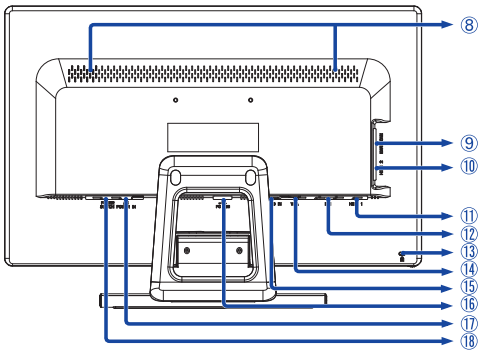

<Back>

① Power Switch (⏻)

② Power Indicator

NOTE Blue: Normal operation
Orange: Power Management

③ Select / Input select Button (2)

④ Scroll up / X-Res Technology Button (▲)

⑤ Scroll down / i-Style Color Button (▼)

⑥ Menu Button (1)

⑦ Touch Pen

⑧ Speakers

⑨ Headphone Connector (EARPHONE)

⑩ HDMI Connector (HDMI2)

⑪ HDMI Connector (HDMI1)

⑫ DVI-D 24pin Connector (DVI)

⑬ Keyhole for Security Lock

NOTE You can fasten a security lock and cable to prevent the monitor from being removed without your permission.

⑭ D-SUB mini 15pin Connector (VGA)

⑮ Audio Connector (AUDIO IN)

⑯ USB Connector (PC USB)

⑰ AC Connector (AC POWER IN)

⑱ Main Power Switch (POWER SWITCH)

CONNECTING YOUR MONITOR

① Ensure that both the computer and the monitor are switched off.
② Connect the computer to the monitor with the signal cable.
③ Connect the computer to the monitor with the USB Cable.
④ Connect the monitor to the audio equipment with the Audio Cable for computer when using the audio features.
⑤ Connect the Power Cable to the monitor first and then to the power supply.
⑥ Turn on your monitor (Main Power Switch and Power Switch) and computer.

NOTE

- The signal cables used for connecting the computer and monitor may vary with the type of computer used. An incorrect connection may cause serious damage to both the monitor and the computer. The cable supplied with the monitor is for a standard 15 pin D-Sub connector. If a special cable is required please contact your local iiyama dealer or regional iiyama office.
- For connection to Macintosh computers, contact your local iiyama dealer or regional iiyama office for a suitable adaptor.
- Make sure you tighten the finger screws at each end of the signal cable.

[Example of Connection]

<Back>

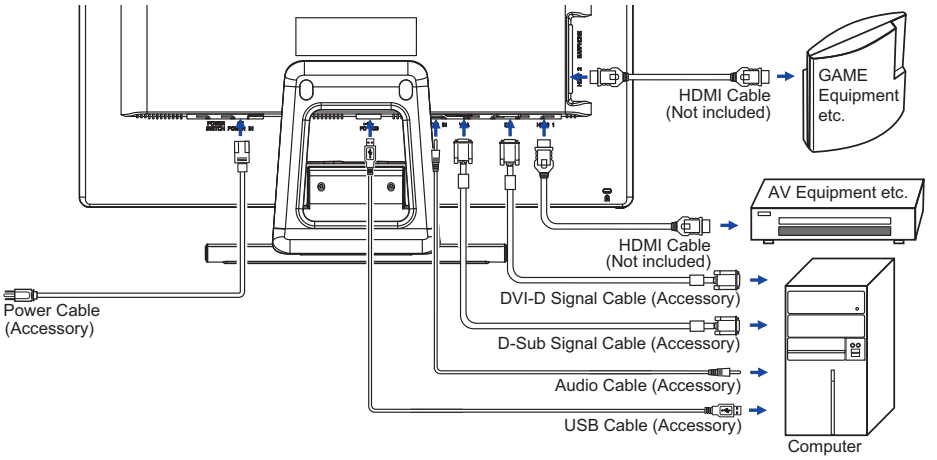

COMPUTER SETTING

■ Signal Timing
Change to the desired signal timing listed on page 23: COMPLIANT TIMING.

ADJUSTING THE VIEWING ANGLE

■ For optimal viewing it is recommended to look at the full face of the monitor.

■ When changing the monitors angle, ensure the cabinet is secure when moving the stand thus avoiding any accidents.

■ You are able to adjust the monitor's angle up to 5 - 37 degrees upward.

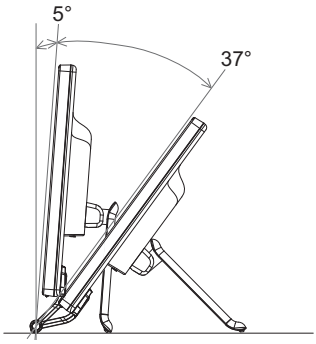

NOTE

■ Do not touch the LCD screen when you change the angle. It may cause damage or break the LCD screen.

■ Careful attention is required not to catch your fingers or hands when you change the angle.

■ When packaged, the stand is folded. Do not use in this state otherwise injury may occur if it falls or is dropped.

OPERATING THE MONITOR

To create the best picture, your iiyama LCD monitor has been preset at the factory with the COMPLIANT TIMING shown on page 23. You are also able to adjust the picture by following the button operation shown below. For more detailed adjustments, see page 16 for SCREEN ADJUSTMENTS.

① **Press the [1] Button to start the On Screen Display (OSD) feature. There are additional Menu items which can be switched by using the ▲ / ▼ Buttons.**

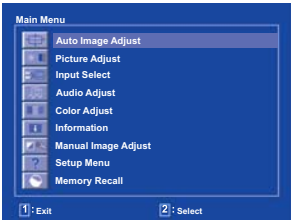

② **Select the Menu item which contains the adjustment icon relating to the adjustment you want to make. Press the [2] Button. Then, use the ▲ / ▼ Buttons to highlight the desired adjustment icon.**

③ **Press the [2] Button again. Use the ▲ / ▼ Buttons to make the appropriate adjustment or setting.**

④ **Press the [1] Button to leave the menu, and the settings you just made would be automatically saved.**

For example, to correct for vertical position, select Menu item of Manual Image Adjust and then press the [2] Button. Then, select ↔ (H./V.Position) by using the ▲ / ▼ Buttons.

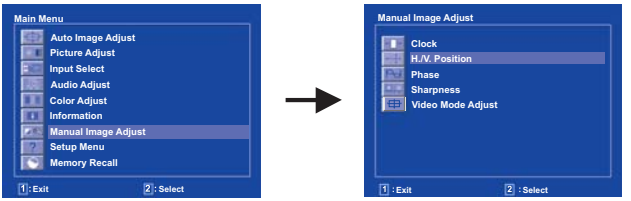

An adjustment page appears after you press the [2] Button. Then, select V. Position by using the ▲ / ▼ Buttons. Press the [2] Button again. Then, use the ▲ / ▼ Buttons to change the vertical position settings. The vertical position of the overall display should be changing accordingly while you are doing this.

Press the [1] Button lastly, it ends, all changes are saved in the memory.

NOTE

- When button operations are aborted during adjustment, On-Screen Display disappears when the time set for the OSD Time Out has passed. Also, the [1] button can be used to return previous menu and turn off the On-Screen Display.
- Any changes are automatically saved in the memory when the On Screen Display disappears. Turning off the power should be avoided while using the Menu.
- Adjustments for H./V. Position, Clock and Phase are saved for each signal timing. Except for these adjustments, all other adjustments have only one setting which applies to all signal timings.

ADJUSTMENT MENU CONTENTS

Auto Image Adjust

Only Analog Input

Auto Image Adjust

Adjustment Item	Problem / Option	Button to Press
Auto Image Adjust * **Direct**	Adjust H. / V. Position, Clock and Phase automatically.	

* For best results, use the Auto Image Adjust in conjunction with the adjustment pattern. See page 16 for SCREEN ADJUSTMENTS.

Direct

You can skip the Menu items and display an adjustment scale directly by using the following button operations.

- Auto Image Adjust: Pressing and holding of the ▼ Button for about 2 seconds when the Menu is not displayed.

Picture Adjust

Adjustment Item	Problem / Option		Button to Press
Contrast *3	Too dull Too intense		▲ ▼
Brightness *1,2,3	Too dark Too bright		▲ ▼
Adv. Contrast *2,3	Off	Typical Contrast Ratio	
	On	Increased Contrast Ratio	
ECO Mode *3	Off	Normal	
	1	Brightness of back-light is reduced.	
	2	Brightness of back-light is reduced more than 1.	
	3	Brightness of back-light is reduced more than 2.	
Over Drive	Off / -2 / -1 / 0 / +1 / +2 It will improve the gray level response time of the LCD panel. A higher level results in a faster response time.		▲ ▼
X-Res Technology **Direct**	Off	Normal	
	Soft	Enhance the picture edge.	
	Hard	Enhance the picture edge more than the Soft option.	

*1 Adjust the Brightness when you are using the monitor in a dark room and feel the screen is too bright. Can not select when Adv. Contrast is On.

*2 Brightness and Adv. Contrast can not enable the same time when ECO Mode is on.

*3 Contrast, Brightness, Adv. Contrast and ECO Mode adjustments are disabled when i-Style Color is activated.

Direct

You can skip the Menu items and display an adjustment scale directly by using the following button operations.

- X-Res Technology: Press the ▲ Button when the Menu is not displayed.

Input Select Direct **Input Select**

Adjustment Item	Problem / Option	Button to Press
Input Select	VGA	Select the VGA input.
	DVI	Select the DVI input.
	HDMI1	Select the HDMI1 input.
	HDMI2	Select the HDMI2 input.
	Auto	Search for an available input source and select automatically.

NOTE Input source is fixed, not selected automatically when VGA, DVI, HDMI1 and HDMI2 which are selected.

Direct

You can skip the Menu items and display an adjustment scale directly by using the following button operations.

- Input Select: Press the 2 Button when the Menu is not displayed.

Audio Adjust Direct **Audio Adjust**

Adjustment Item	Problem / Option	Button to Press
Volume	Too soft Too loud	▲ ▼
Mute		Return the sound volume to the previous level.
		Turn off the sound temporarily.
HDMI Audio *	Line-In	Select the Line-In input.
	HDMI	Select the HDMI input.

* Suitable for HDMI input only.

Direct

You can skip the Menu items and display an adjustment scale directly by using the following button operations.

- Audio Adjust: Pressing and holding of the ▲ Button for about 2 seconds when the Menu is not displayed.

Color Adjust

Color Adjust

Adjustment Item	Problem / Option		Button to Press
Cool	Bluish white		
Normal	Reddish white		
Warm	Greenish white		
User Color	Red	Too weak / Too strong	▲ / ▼
	Green		
	Blue		
i-Style Color **Direct**	Off	Return to a state set by color adjustment except i-Style Color.	
	Standard	For general windows environment and monitor default setting.	
	Game	For PC game environment.	
	Cinema	For movie and video environment.	
	Scenery	For displaying outdoor scenery images	
	Text	For text editing and viewing in a word processing environment.	

Direct

You can skip the Menu items and display an adjustment scale directly by using the following button operations.

- i-Style Color: Press the ▼ Button when the Menu is not displayed.

Information

Information

<Example>

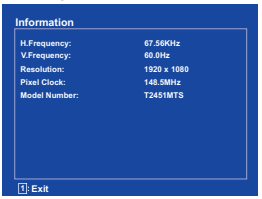

Displays information regarding the current input signal coming from the graphic card in your computer.

NOTE See your graphic card user guide for more information about changing the resolution and refresh.

Manual Image Adjust

Manual Image Adjust

Adjustment Item	Problem / Option		Button to Press
Clock *1	Too narrow Too wide		
H./V. Position *1,2	H. Position	Too left Too right	
	V. Position	Too low Too high	
Phase *1	To correct flickering text or lines		
Sharpness *4	Adjust the picture quality at resolutions of less 1920 x 1080. You can change the picture quality (3 steps).		
Video Mode Adjust	Full Screen	Full screen display	
	Aspect Ratio *3	Expansion display of Aspect	

*1 Only Analog Input.

*2 See page 16 for SCREEN ADJUSTMENTS.

*3 It can display in the center of the screen with a 4:3, 5:4 or 16:10 aspect ratio when input video resolution is 4:3, 5:4 or 16:10.

*4 Sharpness is disabled when X-Res Technology is activated.

Setup Menu

Setup Menu

Adjustment Item	Problem / Option		Button to Press
Language Select	English	English	
	Français	French	
	Deutsch	German	
	Nederlands	Dutch	
	Polski	Polish	
	Русский	Russian	
	日本語	Japanese	
	简体中文	Simplified Chinese	
	繁體中文	Traditional Chinese	
OSD Position	H.Position	OSD is too left OSD is too right	
	V.Position	OSD is too low OSD is too high	
OSD Time Out	You can set the OSD display duration time. 5 / 15 / 30 / 60 seconds		
OSD Background	On	The background of OSD is mode transparent.	
	Off	Retune the background of OSD.	
Opening Logo	On	iiyama Logo displayed when the monitor is turned on.	
	Off	iiyama Logo does not display when the monitor is turned on.	
LED	On	The Power Indicator is turned On.	
	Off	The Power Indicator is turned Off.	

NOTE Turn Off the Power Indicator when you are bothered by the light.

Memory Recall

Memory Recall

Adjustment Item	Problem / Option	Button to Press
Memory Recall	Factory-preset data is restored.	

● Lock Mode

<OSD Menu>

1. The OSD lock will be activated by pressing the front buttons [1] and ▲ for about 10 seconds. If you try to access the OSD by pressing any of the buttons [1], ▼, ▲ and [2], message "OSD Locked" will appear on the screen.
2. The OSD lock will be deactivated by pressing the front buttons [1] and ▲ again for 10 seconds.

<Power Switch>

1. The power switch lock will be activated by pressing the front buttons [1] and ▼ for 10 seconds. Locking the power switch means that won't be able to turn off the Monitor while the power switch is locked. If presses the power switch message "Power Button Locked" will appear on the screen.
2. The power switch lock will be deactivated by pressing the front buttons [1] and ▼ again for about 10 seconds.

SCREEN ADJUSTMENTS

Adjust the image by following the procedure below to get the desired picture when selecting Analog input.

- The screen adjustments described in this manual are designed to set image position and minimize flicker or blur for the particular computer in use.
- The monitor is designed to provide the best performance at resolution of 1920 × 1080, but can not provide the best at resolutions of less than 1920 × 1080 because the picture is automatically stretched to fit the full screen. It is recommended to operate at resolution of 1920 × 1080 in normal use.
- Displayed text or lines will be blurred or irregular in thickness when the picture is stretched due to the screen enlargement process.
- It is preferable to adjust the image position and frequency with the monitor controls, rather than the computer software or utilities.
- Perform adjustments after a warm-up period of at least thirty minutes.
- Additional adjustments may be required after the Auto Image Adjust depending on the resolution or signal timing.
- The Auto Image Adjust may not work correctly when displaying the picture other than the screen adjustment pattern. In this case, manual adjustments are required.

There are two ways to adjust the screen. One way is automatic adjustment for Position, Clock and Phase. The other way is performing each adjustment manually.
Perform the Auto Image Adjust first when the monitor is connected to a new computer, or resolution is changed. If the screen has a flicker or blur, or the picture does not fit in the display area after performing the Auto Image Adjust, manual adjustments are required. Both adjustments should be made by using the screen adjustment pattern (Test.bmp) obtained via the IIYAMA web site (http://www.iiyama.com).
Adjust the image by following the procedure below to get the desired picture.
This manual explains adjustment under Windows 95/98/2000/Me/XP/Vista/7.

① **Display the picture at the optimum resolution.**

② **Enter the Test.bmp (screen adjustment pattern) to wallpaper.**

NOTE
- Consult the appropriate documentation for doing this.
- Test.bmp is made at resolution of 1280 × 1024. Set the display position to center in the wallpaper setting dialogue box. If you use Microsoft® PLUS! 95/98 cancel the setting of “Stretch desktop wallpaper to fit the screen”.

[Adjustment pattern]

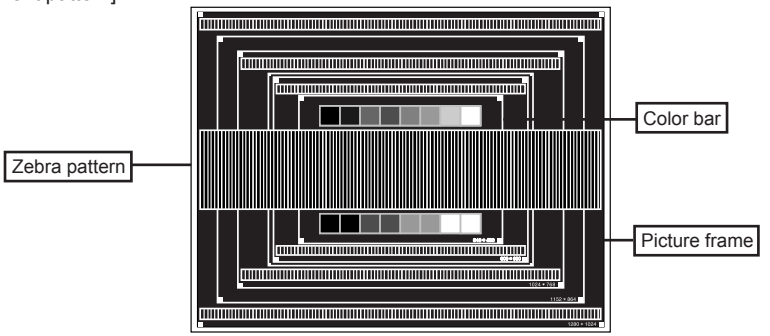

③ **Pressing and holding of the ▼ Button for about 2 seconds. (Auto Image Adjust)**

④ **Adjust the image manually by following procedure below when the screen has a flicker or blur, or the picture does not fit in the display area after performing the Auto Image Adjust.**

⑤ **Adjust the V.Position so that the top and bottom of the picture frame will fit to the display area.**

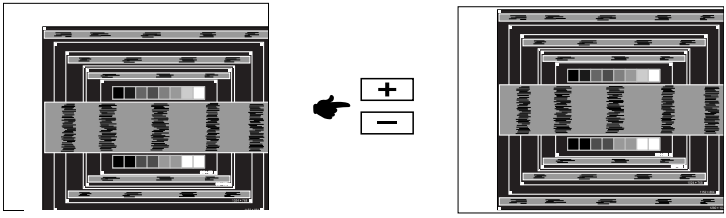

⑥ **1) Adjust the H.Position so that the left side of the picture frame will move to the left edge of the display area.**

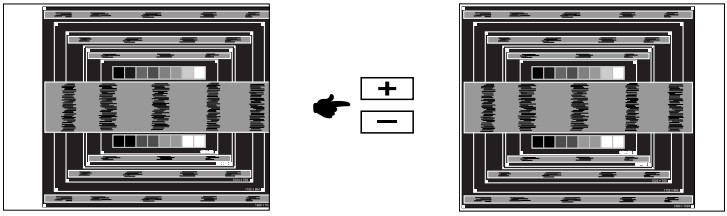

2) Stretch the right side of the picture frame to the right edge of the display area by adjusting the Clock.

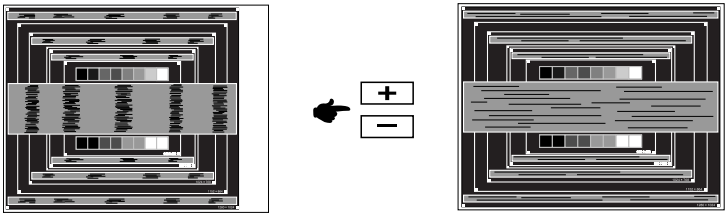

NOTE

- When the left side of the picture frame moves apart from the left edge of the display area during the Clock adjustment, adjust steps 1) and 2).
- Another way to make the Clock adjustment is to correct the vertical wavy lines in the zebra pattern.
- The picture may flicker during the Clock, H.Position and V.Position adjustment.
- In case the picture frame is bigger or smaller than the data display area after the Clock adjustment, repeat steps from ③.

⑦ **Adjust the Phase to correct horizontal wavy noise, flicker or blur in the zebra pattern.**

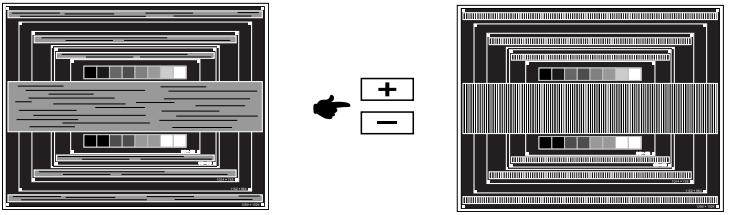

NOTE

- In case the strong flicker or blurs remain on a part of the screen, repeat steps ⑥ and ⑦ because the Clock may not be adjusted correctly. If the flicker or blurs still remain, set the refresh rate of computer to low (60Hz) and repeat steps from ③ again.
- Adjust the H.Position after the Phase adjustment if the horizontal position moves during the adjustment.

⑧ **Adjust the Brightness and Color to get the desired picture after you complete the Clock and Phase adjustments.**

Put back your favorite wallpaper.

POWER MANAGEMENT FEATURE

The power management feature of this product complies with power saving requirement of ENERGY STAR® and VESA DPMS. When activated, it automatically reduces unnecessary power consumption of the monitor when your computer is not in use.

To use the feature, the monitor needs to be connected to a VESA DPMS compliant computer. There is a power management step the monitor takes as described below. The power management function, including any timer settings is configured by the operating system. Check your operating system manual for information on how this can be configured.

■ Power Management Mode

When the H-sync signal / V-sync signal / H and V sync signals from the computer are off, the monitor enters into Power Management Mode which reduces the power consumption to less than 0.5W. The screen becomes dark, and the power indicator turns to orange. From Power Management Mode, the image reappears in several seconds when either the keyboard or the mouse are touched again.

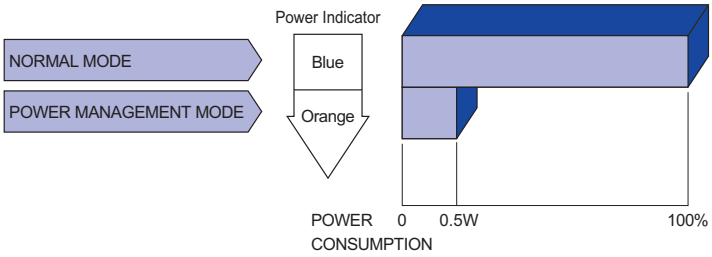

NOTE

- Even when using the power management mode, the monitor consumes electricity. Turn off the Power Switch whenever the monitor is not in use, during the night and weekends, to avoid unnecessary power consumption.
- It is possible that the video signal from the computer may be on while the H or V sync signal is missing. In this instance, the POWER MANAGEMENT feature may not work properly.

TROUBLE SHOOTING

If the monitor fails to operate correctly, please follow the steps below for a possible solution.

1. Perform the adjustments described in OPERATING THE MONITOR, depending on the problem you have. If the monitor does not get a picture, skip to 2.
2. Consult the following items if you cannot find an appropriate adjustment item in OPERATING THE MONITOR or if the problem persists.
3. If you are experiencing a problem which is not described below or you cannot correct the problem, discontinue using the monitor and contact your dealer or iiyama service center for further assistance.

Problem	Check
① The picture does not appear.	
(Power indicator does not light up.)	☐ The Power Cable is firmly seated in the socket. ☐ The Power Switch is turned ON. ☐ The Main Power Switch is turned ON. ☐ The AC socket is live. Please check with another piece of equipment.
(Power indicator is blue.)	☐ If the blank screen saver is in active mode, touch the keyboard or the mouse. ☐ Increase the Contrast and/or Brightness. ☐ The computer is ON. ☐ The Signal Cable is properly connected. ☐ The signal timing of the computer is within the specification of the monitor.
(Power indicator is orange.)	☐ If the monitor is in power management mode, touch the keyboard or the mouse. ☐ The computer is ON. ☐ The Signal Cable is properly connected. ☐ The signal timing of the computer is within the specification of the monitor.
② The screen is not synchronized.	☐ The Signal Cable is properly connected. ☐ The signal timing of the computer is within the specification of the monitor. ☐ The video output level of the computer is within the specification of the monitor.
③ The screen position is not in the center.	☐ The signal timing of the computer is within the specification of the monitor.
④ The screen is too bright or too dark.	☐ The video output level of the computer is within the specification of the monitor.
⑤ The screen is shaking.	☐ The power voltage is within the specification of the monitor. ☐ The signal timing of the computer is within the specification of the monitor.

Problem	Check
⑥ No sound.	☐ The audio equipment (computer etc.) is ON. ☐ The Audio Cable is properly connected. ☐ The Volume is turned up. ☐ The Mute is OFF. ☐ The audio output level of the audio equipment is within the specification of the monitor.
⑦ The sound is too loud or too quiet.	☐ The audio output level of the audio equipment is within the specification of the monitor.
⑧ A strange noise is heard.	☐ The Audio Cable is properly connected.

RECYCLING INFORMATION

For better environment protection please don't dispose your monitor.
Please visit our web site: www.iiyama.com/recycle for monitor recycling.

APPENDIX

Design and specifications are subject to change without prior notice.

SPECIFICATIONS

Touch Screen	Technology	Optical
	Light transmission	88%
	Communication system	USB serial transfer
Size Category		24"
LCD Panel	Panel technology	TN
	Size	Diagonal: 23.6" (60cm)
	Pixel pitch	0.272mm H × 0.272mm V
	Brightness	300cd/m^2 (Typical)
	Contrast ratio	1000 : 1 (Typical), ACR Function Available
	Viewable angle	Right / Left : 85 degrees each, Up / Down: 80 degrees each (Typical)
	Response time	5ms (Typical), 2ms (Gray to Gray)
Display Colors		Approx.16.7M
Sync Frequency		Analog: Horizontal: 24.0-82.0kHz, Vertical: 55-76Hz Digital: Horizontal: 30.0-82.0kHz, Vertical: 55-76Hz
Maximum Resolution		1920 × 1080, 2.1 MegaPixels
Input Connector		D-Sub mini 15 pin, DVI-D 24 pin,HDMI
Plug & Play		VESA DDC2B™
Input Sync Signal		Separate sync: TTL, Positive or Negative
Input Video Signal		Analog: 0.7Vp-p (Standard), 75Ω, Positive Digital: DVI (Digital Visual Interface Standard Rev.1.0) compliance Digital: HDMI
Input Audio Connector		ø 3.5mm mini jack (Stereo)
Input Audio Signal		1.0Vrms maximum
Headphone Connector		ø 3.5mm mini jack (Stereo)
Speakers		2W × 2 (Stereo speakers)
Maximum Screen Size		521.3mm W × 293.2mm H / 20.51" W × 11.54" H
Power Source		100-240VAC, 50/60Hz, 0.8A
Power Consumption*[1]		22W typical, Power management mode: 0.5W maximum
Dimensions*[2] / Net Weight		556.0 × 403.5 × 122.5mm / 21.9 × 15.9 × 4.8" (W×H×D) 5.5kg / 12.1lbs
Tilt Angle		Upward: 5 - 37 degrees
Environmental Considerations		Operating: Temperature 5 to 35°C / 41 to 95°F Humidity 10 to 80% (No condensation) Storage: Temperature -20 to 60°C / -4 to 140°F Humidity 5 to 85% (No condensation)
Approvals		CE, TÜV-Bauart, CU, VCCI-B, PSE, ENERGY STAR®

NOTE *[1] Audio equipment is not connected.

*[2] When the stand is closed.

DIMENSIONS

* When the stand is closed.

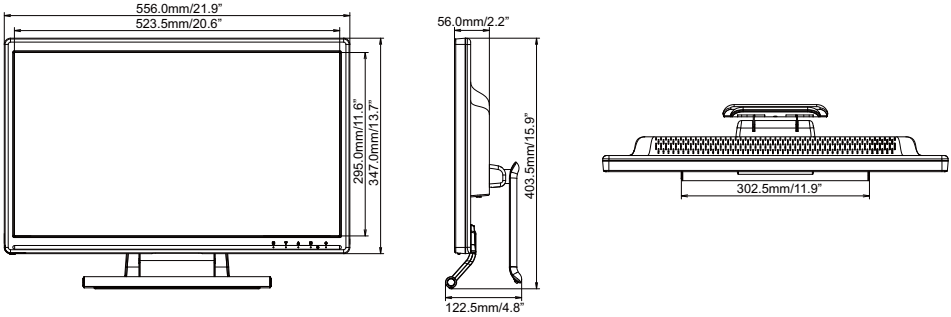

COMPLIANT TIMING

Video Mode			Horizontal Frequency	Vertical Frequency	Dot Clock	
VESA	VGA	640 × 480	31.469kHz	59.940Hz	25.175MHz	
			37.500kHz	75.000Hz	31.500MHz	
			37.861kHz	72.809Hz	31.500MHz	
	SVGA	800 × 600	35.156kHz	56.250Hz	36.000MHz	
			37.879kHz	60.317Hz	40.000MHz	
			46.875kHz	75.000Hz	49.500MHz	
	XGA	1024 × 768	48.363kHz	60.004Hz	65.000MHz	
			56.476kHz	70.069Hz	75.000MHz	
			60.023kHz	75.029Hz	78.750MHz	
	SXGA	1280 × 1024	63.981kHz	60.020Hz	108.000MHz	
			79.976kHz	75.025Hz	135.000MHz	
	WXGA+	1440 × 900	55.935kHz	59.887Hz	106.500MHz	
			70.635kHz	74.984Hz	136.750MHz	
	WSXGA+	1680 × 1050	65.290kHz	60.000Hz	146.250MHz	
	Full HD	1920 × 1080	66.590kHz	59.930Hz	138.500MHz	
PC9801		640 × 400	24.827kHz	56.424Hz	21.053MHz	*

NOTE * Digital input is not compliant.