EWF 1408 WDL2

EN Washing Machine

User Manual

Electrolux

CONTENTS

1. SAFETY INFORMATION....3
2. SAFETY INSTRUCTIONS....4
3. PRODUCT DESCRIPTION.... 5
4. CONTROL PANEL.... 6
5. PROGRAMMES 7
6. CONSUMPTION VALUES....10
7. OPTIONS....11
8. SETTINGS....13
9. BEFORE FIRST USE.... 14
10. DAILY USE.... 15
11. HINTS AND TIPS.... 19
12. CARE AND CLEANING....20
13. TROUBLESHOOTING....24
14. EMERGENCY DOOR OPENING.... 27
15. TECHNICAL DATA....28

WE’RE THINKING OF YOU

Thank you for purchasing an Electrolux appliance. You’ve chosen a product that brings with it decades of professional experience and innovation. Ingenious and stylish, it has been designed with you in mind. So whenever you use it, you can be safe in the knowledge that you’ll get great results every time.
Welcome to Electrolux.
Visit our website for:

Get usage advice, brochures, trouble shooter, service information:
www.electrolux.com

Register your product for better service:
www.registerelectrolux.com

Buy Accessories, Consumables and Original spare parts for your appliance:
www.electrolux.com/shop

CUSTOMER CARE AND SERVICE

Always use original spare parts.
When contacting our Authorised Service Centre, ensure that you have the following data available: Model, PNC, Serial Number.
The information can be found on the rating plate.

Warning / Caution-Safety information

General information and tips

Environmental information

Subject to change without notice.

1. ⚠ SAFETY INFORMATION

Before the installation and use of the appliance, carefully read the supplied instructions. The manufacturer is not responsible if an incorrect installation and use causes injuries and damages. Always keep the instructions with the appliance for future reference.

1.1 Children and vulnerable people safety

- This appliance can be used by children aged from 8 years and above and persons with reduced physical, sensory or mental capabilities or lack of experience and knowledge if they have been given supervision or instruction concerning use of the appliance in a safe way and understand the hazards involved.
- Do not let children play with the appliance.
- Children of less than 3 years should be kept away unless continuously supervised.
- Keep all packaging away from children.
- Keep all detergents away from children.
- Keep children and pets away from the appliance door when it is open.
- Cleaning and user maintenance shall not be made by children without supervision.

1.2 General Safety

- Do not change the specification of this appliance.
- Obey the maximum load volume of 10 kg (refer to the “Programme chart” chapter).
- The operating water pressure (minimum and maximum) must be between 0,5 bar (0,05 MPa) and 8 bar (0,8 MPa).
- The ventilation openings in the base (if applicable) must not be obstructed by a carpet.
- The appliance is to be connected to the water mains using the new supplied hose-sets. Old hose sets must not be reused.

- If the supply cord is damaged, it must be replaced by the manufacturer, its Authorised Service Centre or similarly qualified persons in order to avoid a hazard.
- Before maintenance, deactivate the appliance and disconnect the mains plug from the mains socket.
- Do not use water spray and steam to clean the appliance.
- Clean the appliance with a moist soft cloth. Only use neutral detergents. Do not use abrasive products, abrasive cleaning pads, solvents or metal objects.

2. SAFETY INSTRUCTIONS

2.1 Installation

- Remove all the packaging and the transit bolts.
- Keep the transit bolts. When you move the appliance again you must block the drum.
- Always be careful when you move the appliance because it is heavy. Always wear safety gloves.
- Do not install or use a damaged appliance.
- Obey the installation instruction supplied with the appliance.
- Do not install or use the appliance where the temperature is less than 0 °C or where it is exposed to the weather.
- Make sure that the floor where you install the appliance is flat, stable, heat resistant and clean.
- Make sure that there is air circulation between the appliance and the floor.
- Adjust the feet to have the necessary space between the appliance and the carpet.
- Do not install the appliance where the appliance door can not be fully opened.

2.2 Electrical connection

- The appliance must be earthed.
- Always use a correctly installed shockproof socket.
- Make sure that the electrical information on the rating plate agrees with the power supply. If not, contact an electrician.
- Do not use multi-plug adapters and extension cables.
- Make sure not to cause damage to the mains plug and to the mains cable. Should the mains cable need to be replaced, this must be carried out by our Authorised Service Centre.
- Connect the mains plug to the mains socket only at the end of the installation. Make sure that there is access to the mains plug after the installation.
- Do not touch the mains cable or the mains plug with wet hands.
- Do not pull the mains cable to disconnect the appliance. Always pull the mains plug.
- Only for UK and Ireland: The appliance has a 13 amp mains plug. If it is necessary to change the fuse in the mains plug, use a 13 amp ASTA (BS 1362) fuse.
- This appliance complies with the E.E.C. Directives.

2.3 Water connection

- Make sure not to cause damage to the water hoses.
- Before you connect the appliance to new pipes or pipes not used for a long time, let the water flow until it is clean.
- The first time you use the appliance, make sure that there is no leakage.

2.4 Use

WARNING!
Risk of injury, electrical shock, fire, burns or damage to the appliance.

- Use this appliance in a household only.
- Obey the safety instructions on the detergent packaging.
- Do not put flammable products or items that are wet with flammable products in, near or on the appliance.
- Make sure that you remove all metal objects from the laundry.
- Do not put a container to collect possible water leakage under the appliance. Contact the Authorised Service Centre to ensure which accessories can be used.
- Do not touch the glass of the door while a programme operates. The glass can be hot.

2.5 Internal light

WARNING!
Risk of injury.

- Visible LED radiation, do not look directly into the beam.
- The type of light bulb or halogen lamp used for this appliance is only for household appliances. Do not use it for house lighting.
- To replace the internal light, contact the Authorised Service Centre.

2.6 Service

- To repair the appliance contact an Authorised Service Centre.
- Use original spare parts only.

2.7 Disposal

WARNING!
Risk of injury or suffocation.

- Disconnect the appliance from the mains supply.
- Cut off the mains cable and discard it.
- Remove the door catch to prevent children and pets to get closed in the appliance.

3. PRODUCT DESCRIPTION

3.1 Appliance overview

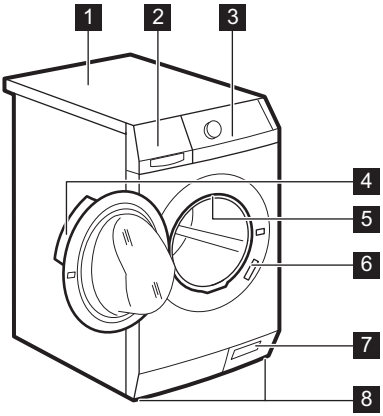

1 Worktop
2 Detergent dispenser
3 Control panel
4 Door handle
5 Internal light
6 Rating plate
7 Drain pump filter
8 Feet for the appliance level

3.2 Fixing plate kit (4055171146)

Available from your authorized dealer.

If you install the appliance on a plinth, secure the appliance in the fixing plates.

Read carefully the instructions supplied with the accessory.

4. CONTROL PANEL

4.1 Control panel description

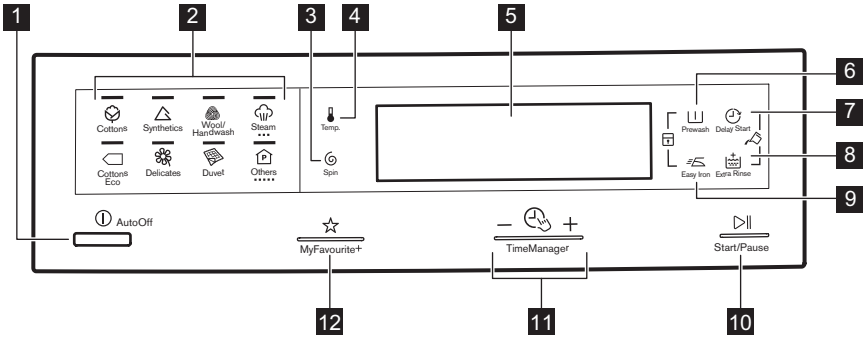

1 On Off button (AutoOff)

2 Programme touchpads

3 Spin reduction touchpad (Spin)

4 Temperature touchpad (Temperature)

5 Display

6 Prewash touchpad (Prewash)

7 Delay start touchpad (Delay Start)

8 Extra rinse touchpad (Extra Rinse)

9 Easy iron touchpad (Easy Iron)

10 Start/Pause touchpad (Start/ Pause)

11 Time Manager touchpads – + (TimeManager)

12 Favourite programme touchpad (MyFavourite+)

4.2 Display

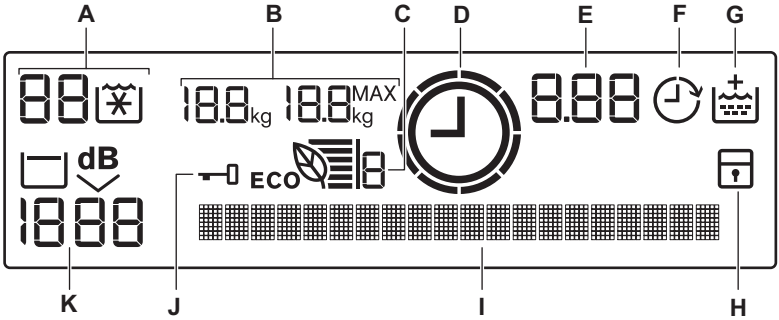

A) The temperature area:
88: Temperature indicator.
– –/: Cold water indicators.

B) 18.8kg: Laundry weight indicator.
18.8MAXkg: Maximum load indicator.
The display shows these indicators when the door is open.

C) ECO: Eco Info indicator.

D): Time Manager indicator.

E) The time area:
1.25: The programme duration.
2h: The delay start.
0: Programme is completed.

F): Delay start indicator.

G): Extra Rinse indicator.

H): The indicator of child lock on when you activate this device .

I) The text bar. The text bar shows the programme status, alarm messages and other messages that help you to operate with the appliance.

J): Door locked indicator.
You cannot open the appliance door when the indicator is on.
You can open the door only when the indicator goes off.

K) The spin area:
- 1888 : Spin speed indicator.
- – – – : No Spin indicator.
- : Rinse Hold indicator.
- dB : Extra Silent indicator.

5. PROGRAMMES

5.1 Programme Chart

Programme Temperature range	Maximum load Maximum spin speed	Programme description (Type of load and soil level)
Washing programmes **Press a programme touchpad one time to set the related programme:**		
Cottons 90°C - Cold	10 kg 1400 rpm	**White cotton and coloured cotton**. Normal soil and light soil.

Programme Temperature range	Maximum load Maximum spin speed	Programme description (Type of load and soil level)
Cottons Eco[1)] 60° - 40° C	10 kg 1400 rpm	**White cotton and colour-fast cotton**. Normal soil. The energy consumption decreases and the time of the washing programme is extended.
Synthetics 60° - Cold	4 kg 1200 rpm	**Synthetic items or mixed fabric items**. Normal soil.
Delicates 40° - Cold	4 kg 1200 rpm	**Delicate fabrics as acrylics, viscose, polyester items**. Normal soil.
Wool/Hand-wash 40° - Cold	2 kg 1200 rpm	**Machine washable wool, hand washable wool and delicate fabrics** with «hand washing» care symbol.[2)]
Duvet 60° - 30°	4 kg 800 rpm	Special programme for one **synthetic blanket, duvet, bedspread** and so on.

Steam

Press again and again this touchpad until you set the desired programme: Steam programmes[3)]

Steam can be used for dried, washed or worn once laundry. These programmes can reduce creases and odours and make your laundry more soft.

Do not use any detergent. If necessary, remove stains by washing or using localized stain removal.

Steam programmes do not perform any hygienic cycle.

Do not set a Steam programme with these types of items:

- items where it is not specified on the care label as being suitable for tumble drying.
- all items with plastic, metal, wooden parts or alike.

Steam Cottons 40°	1.5 kg	Steam programme for **cottons**. This cycle helps to dewrinkle the laundry.
Steam Synthetics 40°	1.5 kg	Steam programme for **synthetic items**. This cycle helps to dewrinkle the laundry.
Steam Refresh 40°	1.5 kg	Steam programme for **cotton and synthetic items**. This cycle removes odours from the laundry.[4)]

Programme Temperature range	Maximum load Maximum spin speed	Programme description (Type of load and soil level)
Other programmes **Press again and again this touchpad until you set the desired programme:**		
14 min. 30°	1.5 kg 800 rpm	**Synthetic and mixed fabric** items. Light soil and items to freshen up.
Sport Light 30°	2.5 kg 800 rpm	**Synthetic and delicate items**. Light soil items or items to refresh.
Jeans 40° - Cold	10 kg 1200 rpm	**Items in denim and jersey**. Also for dark coloured items.
Rinse	10 kg 1400 rpm	To rinse and spin the laundry. **All fabrics**.
Spin/Drain[5)]	10 kg 1400 rpm	To spin the laundry and to drain the water in the drum. **All fabrics**.

[1)] **Standard programmes for the Energy Label consumption values.** According to regulation 1061/2010, these programmes are respectively the «Standard 60°C cotton programme» and the «Standard 40°C cotton programme». They are the most efficient programmes in terms of combined energy and water consumption for washing normally soiled cotton laundry.

The water temperature of the washing phase may differ from the temperature declared for the selected programme.

[2)] During this cycle the drum rotates slowly to ensure a gentle washing. It can seem that the drum doesn't rotate or doesn't rotate properly. Consider this as a normal functioning of the appliance.

[3)] If you set a Steam programme with dried laundry, at the end of the cycle the laundry could be humid. It is better to expose the items to the fresh air for about 10 minutes to let the humidity dry. When the programme is completed, quickly remove the laundry from the drum. After a steam cycle, items may to be ironed anyway, but with less effort!

[4)] Steam does not remove animal odours.

[5)] Set the spin speed. Make sure it agrees with the laundry. If you set No Spin option the only drain phase is available.

Programme options compatibility

Programme				dB				
	■	■	■	■	■	■	■	■
	■	■	■		■	■		■
	■	■	■	■	■	■	■	■
	■	■	■	■	■	■		■

Programme				dB				
	■	■	■	■		■		
	■					■		
14 min.	■	■	■			■		
Sport Light	■	■				■		
Jeans	■	■	■		■	■		
Rinse	■	■	■			■		■
Spin/Drain[1)]	■	■				■		

1) Set the spin speed. Make sure it agrees with the laundry. If you set No Spin option the only drain phase is available.

5.2 Woolmark Apparel Care - Blue

The wool wash cycle of this machine has been approved by The Woolmark Company for the washing of wool garments labelled as «hand wash» provided that the garments are washed according to the instructions issued by the manufacturer of this washing machine. Follow the garment care label for drying and other laundry instructions. M1144

In UK, Eire, Hong Kong and India the Woolmark symbol is a certification trademark.

6. CONSUMPTION VALUES

The data of this table are approximate. Different causes can change the data: the quantity and type of laundry, the water and ambient temperature.

At programme start the display shows the duration programme for the maximum load capacity.
During the washing phase the programme duration is automatically calculated and can be greatly reduced if the laundry load is lower than the maximum load capacity (e.g. Cotton 60°C, maximum load capacity 10 kg, the programme duration exceeds 2 hours; real load 1 kg, the programme duration don’t reach 1 hour).
When the appliance is calculating the real programme duration a dot blinks in the display.

Programmes	Load (kg)	Energy consumption (kWh)	Water consumption (litre)	Approximate programme duration (minutes)	Remaining moisture (%)[1]
Cottons 60 °C	10	1,80	82	185	52
Cottons 40 °C	10	1,10	82	185	52
Synthetics 40 °C	4	0,60	55	100	35
Delicates 40 °C	4	0,70	62	86	35
Wool/Handwash 30 °C [2]	2	0,50	59	60	30
Standard cotton programmes					
Standard 60 °C cotton	10	1,13	58	249	52
Standard 60 °C cotton	5	0,76	48	167	52
Standard 40 °C cotton	5	0,52	48	151	52

[1] At the end of spin phase.

[2] Not available for some models.

Off Mode (W)	Left On Mode (W)
0,05	0,05
The information given in the chart above are in compliance with the EU Commission regulation 1015/2010 implementing directive 2009/125/EC.	

7. OPTIONS

7.1 Temperature

Set this option to change the default temperature.

Indicator – – = cold water.

The display shows the set temperature.

7.2 Spin

With this option you can decrease the default spin speed.

The display shows the indicator of the set speed.

Additional spin options:
No Spin

- Set this option to remove all spin phases.
- Set it for very delicate fabrics.
- The rinse phase uses more water for some washing programmes.
- The display shows the indicator – – – .

Rinse Hold

- Set this option to prevent the laundry creases.
- The washing programme stops with the water in the drum. The drum turns

regularly to prevent the laundry creases.
- The door stays locked. You must drain the water to unlock the door.
- The display shows the indicator .

To drain the water refer to ‘At the end of the programme’.

Extra Silent

- Set this option to remove all spin phases and to perform a silent washing.
- The rinse phase uses more water for some washing programmes.
- The washing programme stops with the water in the drum. The drum turns regularly to prevent the laundry creases.
- The door stays locked. You must drain the water to unlock the door.
- The display shows the indicator dB.

To drain the water refer to ‘At the end of the programme’.

7.3 Prewash

With this option you can add a prewash phase to a washing programme.

Use this option for heavy soil.

When you set this option the programme duration increases.

The related indicator comes on.

7.4 Delay Start

With this option you can delay the start of a programme from 30 minutes to 20 hours.

The display shows the related indicator.

7.5 Extra Rinse

With this option you can add some rinses to a washing programme.

Use this option for persons allergic to detergents and in areas where the water is soft.

The related indicator comes on.

7.6 Easy Iron

The appliance carefully washes and spins the laundry to prevent the creases.

The appliance decreases the spin speed, uses more water and adapts the programme duration to the type of laundry.

The related indicator comes on.

7.7 Time Manager – +

When you set a washing programme, the display shows the default duration.

Press — or + to decrease or increase the programme duration.

The Time Manager is available only with the programmes in the table.

Indicator				Cottons Eco	1)	1)
2)	■	■			■	
	■	■	■		■	■
	■	■			■	
	■	■	■	■	■	■
	■	■			■	
	■3)	■3)	■		■3)	■
	■	■			■	
4)	■	■	■3)	■3)	■	■3)

1) If available.

2) Shortest: to fresh the laundry.

3) Programme default duration.

4) Longest: Increasing the programme duration gradually decreases the energy consumption. The optimized heating phase saves energy and the longer duration maintains the same washing results (specially for normal soil).

Eco Info ECO

The Eco Info stripes (available only in cotton and synthetics programmes) show the efficiency of the washing programme in terms of energy saving:

- 6 stripes: the most efficient setting to optimize the washing programme performance.
- 1 stripe: the less efficient setting.

The number of Eco Info stripes changes if you modify the duration of the washing programme (refer to Time Manager), the washing temperature and the laundry weight. To optimize the washing programme performance, the stripe number must increase:

- If you increase the programme duration, the Eco Info stripes increases. The increasing the washing programme duration allows a constant performance that reduces the energy consumption.
- If you decrease the washing temperature, the Eco Info stripes increases.
- If you put more clothes, the Eco Info stripes increases.

Some advices to have the most efficient setting:

- Put a laundry load of 4 kg or more.
- Set the Time Manager indicators or .
- Set the possible lower washing temperature.
- Do not set the Prewash option.

7.8 MyFavourite+☆

The first time you activate the appliance, if you press My Favourite+ the display shows that the memory is empty.

The appliance can memorise automatically the most used washing programmes after some uses.

Press My Favourite+ to set one of the 3 most used washing programmes.

Press My Favourite+ one time to set My Favourite 1.

Press My Favourite+ two times to set My Favourite 2.

Press My Favourite+ three times to set My Favourite 3.

Press ▷II to start the washing programme.

The appliance does not do the permanent option, if it is not activate.
The delay start is not memorised.

8. SETTINGS

8.1 Child Lock

With this option you can prevent that the children play with the control panel.

- To **activate/deactivate** this option, press and at the same time until the indicator **comes on/goes off**.

You can activate this option:

- After you press ▷II: the options and the programme knob are locked.
- Before you press ▷II: the appliance cannot start.

8.2 Permanent Extra Rinse

With this option you can permanently have an extra rinse when you set a new programme.

- To **activate/deactivate** this option press and at the same time until the indicator **comes on/goes off**.

8.3 Acoustic signals

The acoustic signals operate when:

- The programme is completed.
- The appliance has a malfunction.

To **deactivate/activate** the acoustic signals, press and at the same time for 6 seconds.

If you deactivate the acoustic signals, they continue operate when the appliance has a malfunction.

8.4 Weight sensor activating or deactivating

To activate or deactivate the weight sensors, press and at the same time for some seconds.

9. BEFORE FIRST USE

1. Put a small quantity of detergent in the compartment for washing phase.
2. Set and start a programme for cotton at the highest temperature without laundry.

This removes all possible dirt from the drum and the tub.

9.1 Language setting

The display has a default language.

The first time you press the button to activate the appliance, the display tells you to change the language setting.

1. Press — or + to set the language you prefer.
2. Press to confirm the language.

If no language is set after several seconds the appliance operates with the default language. Until you don't set a language, the display asks you to set a language each time you activate appliance.

9.2 Change the language after the first activation

1. Press — and + at the same time for some seconds to enter the language setting
2. Press — or + to set the language you prefer.
3. Press to confirm the language.

9.3 Detergent quantity setting

The text bar also gives the indication about the detergent quantity, when the door is closed after the laundry load. By default, the detergent quantity indication is given as a percentage. 100% is the maximum detergent quantity that you can put in the compartment of the detergent drawer.
You can set the indication as ml to have more precision.

The display can give the indication for 2 types of detergent (powder or liquid):

1. Press and at the same time for some seconds.

The message "**Set dosage det 1**" comes on in the text bar.

2. Press — or + to set the data as ml that agrees with 100%. For the maximum detergent quantity see the detergent container.
3. Press to confirm.

The message "**Set dosage det 2**" comes on in the text bar.

4. Press — or + to set the data as ml that agrees with 100%. For the maximum detergent quantity see the detergent container.
5. Press to confirm.

10. DAILY USE

10.1 Using weight sensors

For a correct operation of the weight sensor, activate the appliance and set the programme BEFORE you put the laundry in the drum.

10.2 Activating the appliance

Press the ⏻ button to activate or deactivate the appliance. A tune sounds when the appliance is activated.

10.3 Setting a programme

1. Press one of the programme touchpad to set the necessary programme:
   - The indicator ▷II flashes.
   - The related programme indicator comes on.
   - The display shows all information about washing programme.
2. If necessary, change the temperature, the spin speed, the cycle duration, or add available options.

When you activate an option, the indicator of the set option comes on.

If you set something incorrect, the display shows that the selection is not possible.

10.4 Loading the laundry

1. Open the appliance door.

The display shows the weight of the laundry 18.8 kg and the maximum programme load 18.8 MAX kg. The text bar tells to add the laundry.

2. Put the laundry in the drum, one item at a time. Shake the items before you put them in the appliance.

On the display, the weight of the laundry updates by steps of kg 0,5. The weight is a general indication that changes with the type of the laundry.

In the programmes with the maximum declared load, if you put too much laundry, the text bar tells that the load is completed. In the other programmes, the **MAX** indicator flashes and the text bar tells that the maximum load is exceeded. To have the best consumption and performance remove some items.

3. Close the door firmly.

The text bar shows the quantity of detergent to use. If you have set the “**Set dosage det 1**” and “**Set dosage det 2**”, the display gives the alternative between two types of detergent.

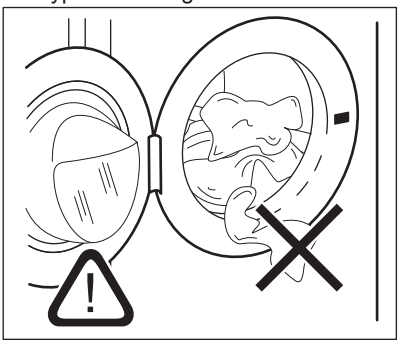

CAUTION!
Make sure that no laundry stays between the seal and the door. There is a risk of water leakage or damage to the laundry.

10.5 Using detergent and additives

1. Measure out the detergent and the fabric conditioner.
2. Put the detergent and the fabric conditioner into the compartments.
3. Carefully close the detergent drawer

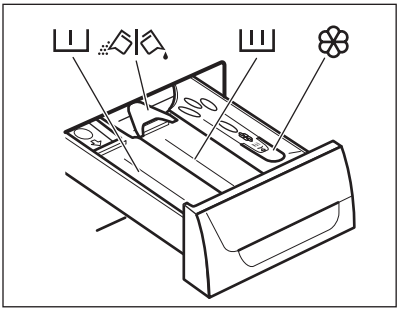

10.6 Detergent compartments

CAUTION!
Use only specified detergents for washing machine.

Always obey the instructions that you find on the packaging of the detergent products.

I	Detergent compartment for prewash phase.
II	Detergent compartment for washing phase.
	Compartment for liquid additives (fabric conditioner, starch).
	Flap for powder or liquid detergent.

10.7 Liquid or powder detergent

1. 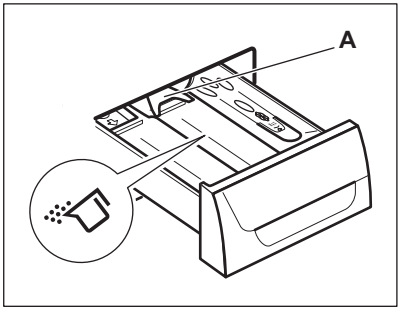

2. 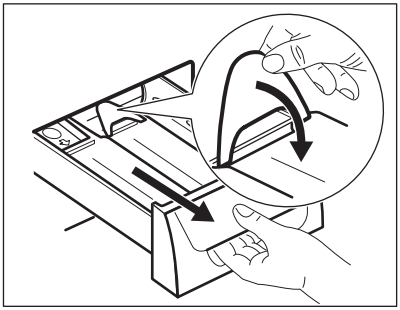

3. 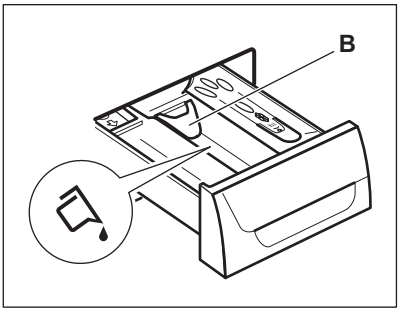

4. 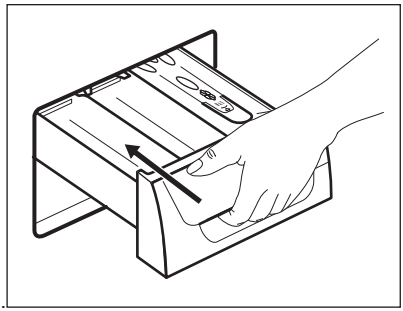

- Position **A** for powder detergent (factory setting).
- Position **B** for liquid detergent.

When you use the liquid detergent:
- Do not use gelatinous or thick liquid detergents.
- Do not put more liquid then the maximum level.
- Do not set the prewash phase.
- Do not set the delay start.

10.8 Starting a programme without the delay start

Press the ▷II.

- The indicator of the ▷II stops to flash and stays on.
- The display updates accordingly during the washing programme.
- The programme starts, the door locks, the display shows the indicator ⊸▯.

  If the indicator ⊸▯ flashes, the door is locking. If the display shows an alarm message after the indicator ⊸▯ has flashed for a few seconds, it indicates that the door is not properly locked (for more details see Troubleshooting chapter).
- The drain pump can operate for a short time when the appliance fills water.

After approximately 15 minutes from the start of the programme:
- The appliance adjusts automatically the programme duration agree with the laundry load.
- The display shows the new value.

10.9 Starting a programme with the delay start

1. Press ⏲ again and again until the display shows the delay you want to set.

The related indicator comes on the display.

2. Press ▷II:
   - The appliance starts the countdown.
   - The door locks, the display shows the indicator ⊸▯.

     If the indicator ⊸▯ flashes, the door is locking. If the display shows an alarm message after

the indicator has flashed for a few seconds, it indicates that the door is not properly locked (for more details see Troubleshooting chapter).
- When the countdown is completed, the programme starts automatically.

You can cancel or change the set of the delay start before you press the . To cancel the delay start:
- Press to set the appliance to pause.
- Press until the display shows .
- Press again to start the programme immediately.

10.10 Interrupting a programme and changing the options

You can change only some options before they operate.

1. Press .

The indicator flashes.

2. Change the options.
3. Press again.

The programme continues.

10.11 Cancelling a running programme

1. Press the button for some seconds to cancel the programme and to deactivate the appliance.
2. Press the same button again to activate the appliance. Now, you can set a new washing programme.

Before starting the new programme the appliance could drain the water. In this case, make sure that the detergent is still in the detergent compartment, if not fill the detergent again.

10.12 Opening the door

CAUTION!
If the temperature and level of the water in the drum are too high and the drum still rotates, you cannot open the door.

While a programme or the delay start operates, the appliance door is locked and the display shows the indicator .

Open the appliance door when the programme or the delay start operates:

1. Press to pause the appliance.
2. Wait until the door lock indicator goes off.
3. Open the door.
4. Close the door and press again .

The programme or delay start continues to operate.

10.13 At the end of the programme

- The appliance stops automatically.
- The acoustic signal operates (if it is activated).
- In the display comes on.
- The indicator of theStart/Pause goes off.
- The door lock indicator goes off.
- You can open the door.
- Remove the laundry from the appliance. Make sure that the drum is empty.
- Close the water tap.
- Press the button AutoOff for some seconds to deactivate the appliance.
- Keep the door ajar, to prevent the mildew and odours.

The washing programme is completed, but there is water in the drum:
- The drum turns regularly to prevent the creases in the laundry.
- The door lock indicator is on. The door stays locked.

- You must drain the water to open the door.

To drain the water:

1. Press ▷||.

The appliance drains the water and spins.

2. To make the appliance drain only, set – – –. If necessary, decrease the spin speed.
3. When the programme is completed and the door lock indicator goes off, you can open the door.
4. Press the button AutoOff for some seconds to deactivate the appliance.

The appliance drains and spins automatically after approximately 18 hours (except for Wool programme).

10.14 AUTO OFF option

The AUTO OFF function automatically deactivates the appliance to decrease the energy consumption when:

- You do not use the appliance for 5 minutes before you press ▷||.

  Press the button ⏻ to activate the appliance again.
- After 5 minutes from the end of the washing programme

  Press the button ⏻ to activate the appliance again.
  The display shows the end of the last set programme.
  Turn the programme knob to set a new cycle.

If you set a programme or an option that ends with water in the drum, the AUTO OFF function **doesn't deactivate** the appliance to remind you to drain the water.

11. HINTS AND TIPS

WARNING!
Refer to Safety chapters.

11.1 The laundry load

- Divide the laundry in: white, coloured, synthetics, delicates and wool.
- Obey the washing instructions that are on the laundry care labels.
- Do not wash together white and coloured items.
- Some coloured items can discolour with the first wash. We recommend that you wash them separately for the first times.
- Button up pillowcases, close zippers, hooks and poppers. Tie up belts.
- Empty the pockets and unfold the items.
- Turn inside out multilayered fabrics, wool and items with painted illustrations.
- Remove hard stains.
- Wash with a special detergent heavy soil stains.
- Be careful with the curtains. Remove the hooks or put the curtains in a washing bag or pillowcase.
- Do not wash in the appliance laundry without hems or with cuts. Use a washing bag to wash small and/or delicate items (e.g. underwired bras, belts, tights, etc.).
- A very small load can cause balance problems with the spin phase. If this occurs, adjust manually the items in the tub and start the spin phase again.

11.2 Stubborn stains

For some stains, water and detergent is not sufficient.

We recommend that you remove these stains before you put the items in the appliance.

Special stain removers are available. Use the special stain remover that is applicable to the type of stain and fabric.

11.3 Detergents and additives

- Only use detergents and additives specially made for washing machines:
  - powder detergents for all types of fabric,
  - powder detergents for delicate fabrics (40 °C max) and woollens,
  - liquid detergents, preferably for low temperature wash programmes (60 °C max) for all types of fabric, or special for woollens only.
- Do not mix different types of detergents.
- To help the environment, do not use more than the correct quantity of detergent.
- Obey the instructions that you find on the on packaging of these products.
- Use the correct products for the type and colour of the fabric, the programme temperature and the level of soil.
- If your appliance has not the detergent dispenser with the flap device, add the liquid detergents with a dosing ball (supplied by the detergent's manufacturer).

11.4 Ecological hints

- Set a programme without the prewash phase to wash laundry with normal soil.
- Always start a washing programme with the maximum load of laundry.
- If necessary, use a stain remover when you set a programme with a low temperature.
- To use the correct quantity of the detergent, check the water hardness of your domestic system

11.5 Water hardness

If the water hardness in your area is high or moderate, we recommend that you use a water softener for washing machines. In areas where the water hardness is soft it is not necessary to use a water softener.

To know the water hardness in your area, contact your local water authority.

Use the correct quantity of the water softener. Obey the instructions that you find on the packaging of the product.

12. CARE AND CLEANING

WARNING!
Refer to Safety chapters.

12.1 External cleaning

Clean the appliance only with soap and warm water. Fully dry all the surfaces.

CAUTION!
Do not use alcohol, solvents or chemical products.

12.2 Descaling

If the water hardness in your area is high or moderate, we recommend that you use a water descaling product for washing machines.

Regularly examine the drum to prevent limescale and rust particles.

To remove rust particles use only special products for washing machine. Do this separately from the laundry wash.

Always obey the instructions that you find on the packaging of the product.

12.3 Maintenance wash

With the low temperature programmes it is possible that some detergent stays in the drum. Make regularly a maintenance wash. To do this:

- Remove the laundry from the drum.
- Set the cotton programme with the highest temperature with a small quantity of detergent.

12.4 Door seal

Regularly examine the seal and remove all objects from the inner part.

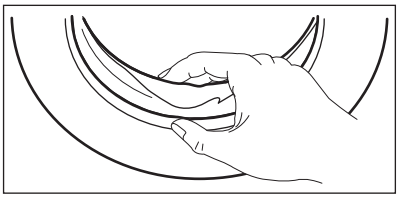

12.5 Cleaning the detergent dispenser

1.

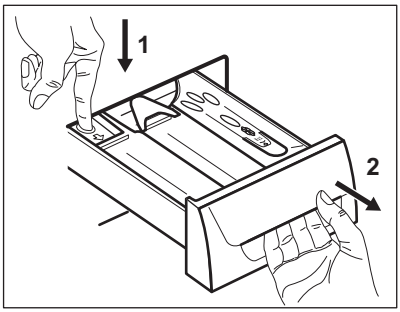

2.

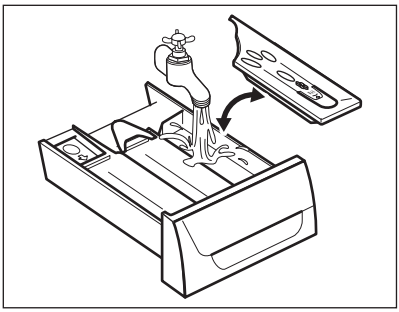

3.

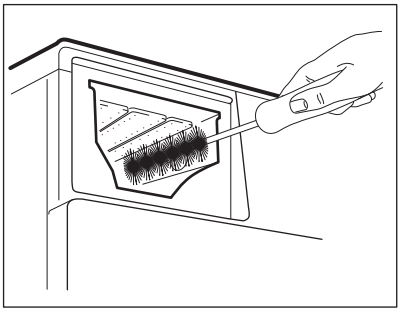

4.

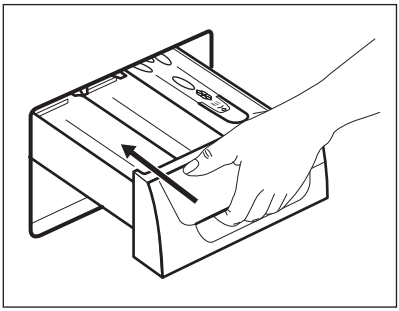

12.6 Cleaning the drain filter

Do not clean the drain filter if the water in the appliance is hot.

1.

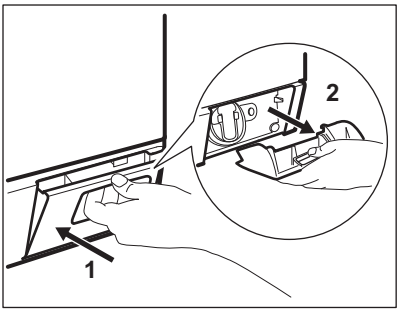

2.

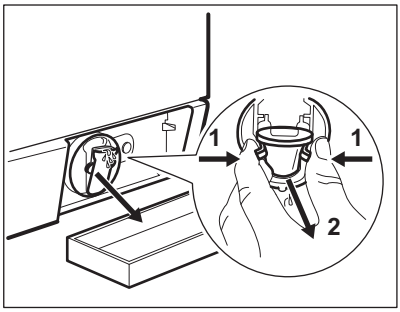

3.

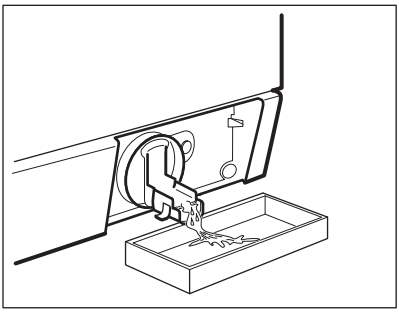

4.

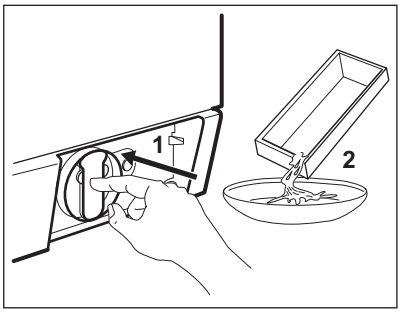

5.

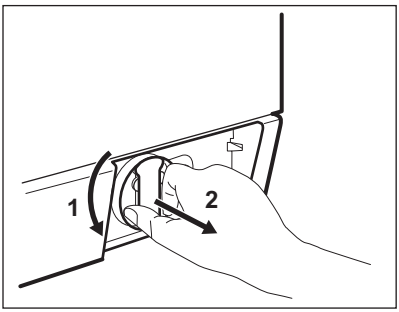

6.

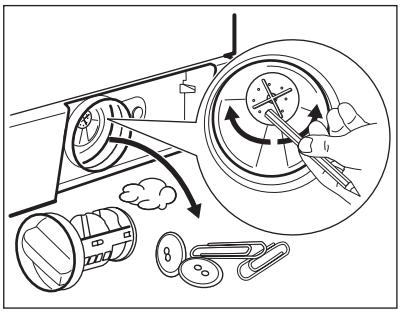

7.

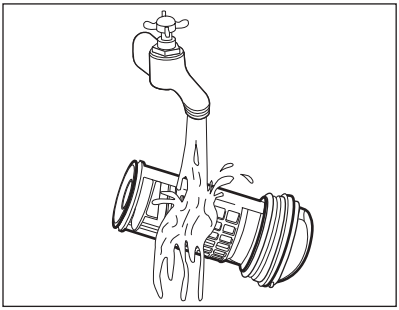

8.

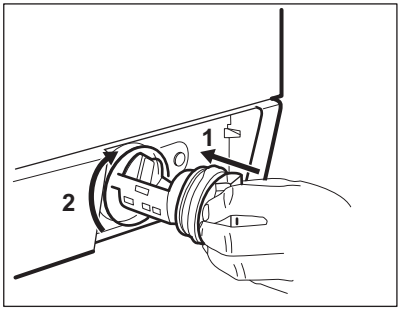

9.

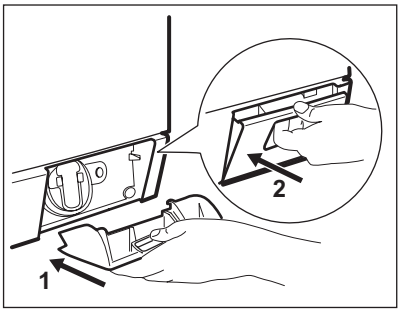

12.7 Cleaning the inlet hose and the valve filter

1.

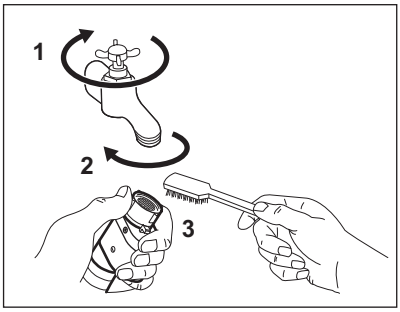

2.

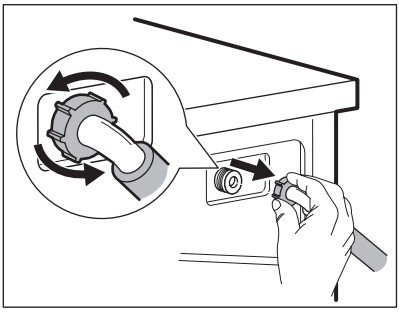

3.

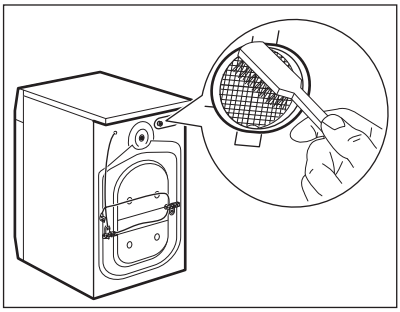

4.

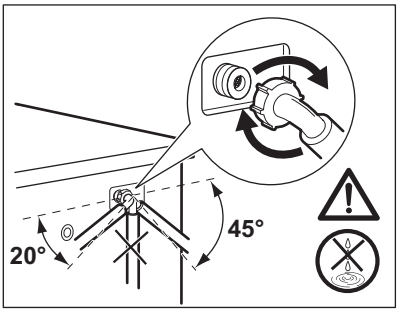

12.8 Emergency drain

Because of a malfunction, the appliance cannot drain the water.

If this occurs, do steps (1) through (9) of 'Cleaning the drain filter'. If necessary, clean the pump.

When you drain the water with the emergency drain procedure, you must activate again the drain system:

1. When you drain the water with the emergency drain procedure, you must activate again the drain system: Put 2 litres of water in the main wash

compartment of the detergent dispenser.
2. Start the programme to drain the water

12.9 Frost precautions

If the appliance is installed in an area where the temperature can be less than 0° C, remove the remaining water from the inlet hose and the drain pump.

1. Disconnect the mains plug from the mains socket.
2. Close the water tap.
3. Put the two ends of the inlet hose in a container and let the water flow out of the hose.
4. Empty the drain pump. Refer to the emergency drain procedure.
5. When the drain pump is empty, install the inlet hose again.

WARNING!
Make sure that the temperature is more than 0 °C before you use the appliance again.
The manufacturer is not responsible for damages caused by low temperatures.

13. TROUBLESHOOTING

WARNING!
Refer to Safety chapters.

13.1 Introduction

The start of the appliance does not occur or it stops during operation.

First try to find a solution to the problem (refer to the table). If not, contact the Authorised Service Centre.

With some problems, the acoustic signals operate and the display shows an alarm code:

- Check the tap - The appliance does not fill with water properly.
- Check drain filter - The appliance does not drain the water.
- Check the door - The appliance door is open or not closed correctly.

If the appliance is overloaded, remove some items from the drum and/or keep pressed the door and touch the Start/Pause button at the same time until the indicator stops flashing (see the following picture).

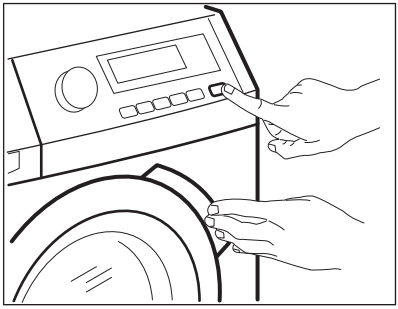

- Water safety alert - The anti-flood device is on. Disconnect the appliance. Close the water tap. Contact the Authorised Service Centre.
- Unstable mains supply - The mains supply is unstable. Wait until the mains supply is stable.
- Detergent overdosing - Reduce the detergent quantity.

WARNING!
Deactivate the appliance before you do the checks.

13.2 Possible failures

Problem	Possible solution
The programme does not start.	Make sure that the mains plug is connected to the mains socket.
	Make sure that the appliance door is closed.
	Make sure that there is not a damaged fuse in the fuse box.
	Make sure that the Start/Pause has been pressed.
	If the delay start is set, cancel the setting or wait for the end of countdown.
	Deactivate the Child Lock function if it is on.
The appliance does not fill with water properly.	Make sure that the water tap is open.
	Make sure that the pressure of the water supply is not too low. For this information, contact your local water authority.
	Make sure that the water tap is not clogged.
	Make sure that the filter of the inlet hose and the filter of the valve are not clogged. Refer to “Care and cleaning”.
	Make sure that the inlet hose has no kinks or bends.
	Make sure that the connection of the water inlet hose is correct.
The appliance does not fill with water and drain immediately.	Make sure that the drain hose is in the correct position. The hose may be too low.
The appliance does not drain the water.	Make sure that the sink spigot is not clogged.
	Make sure that the drain hose has no kinks or bends.
	Make sure that the drain filter is not clogged. Clean the filter, if necessary. Refer to 'Care and cleaning'.
	Make sure that the connection of the drain hose is correct.
	Set the drain programme if you set a programme without drain phase.
	Set the drain programme if you set an option which ends with water in the tub.
The spin phase does not operate or the washing cycle lasts longer than usually.	Set the spin programme.

Problem	Possible solution
	Make sure that the drain filter is not clogged. Clean the filter, if necessary. Refer to 'Care and cleaning'.
	Adjust manually the items in the tub and start the spin phase again. This problem may be caused by balance problems.
There is water on the floor.	Make sure that the couplings of the water hoses are tight and there is not water leakages.
	Make sure that the drain hose have no damages.
	Make sure you use the correct detergent and the correct quantity of it.
You cannot open the appliance door.	Make sure that the washing programme is finished.
	Set the drain or the spin programme if there is water in the drum.
	Make sure that the appliance receives electrical power.
	This problem may be caused by a failure of the appliance. Contact the Authorised Service Centre. If you need to open the door, please read carefully «Emergency door opening».
The appliance makes an unusual noise.	Make sure the levelling of the appliance is correct. Refer to 'Installation'.
	Make sure that the packaging and/or the transit bolts are removed. Refer to 'Installation'.
	Add more laundry in the drum. The load may be too small.
The cycle is shorter than the time displayed.	The appliance calculates a new time according to the laundry load. See the ‘Consumption Values’ chapter.
The cycle is longer than the time displayed.	An unbalanced laundry load increases the duration time. This is a normal behaviour of the appliance.
The washing results are not satisfactory.	Increase the detergent quantity or use a different detergent.
	Use special products to remove the stubborn stains before you wash the laundry.
	Make sure that you set the correct temperature.
	Decrease the laundry load.
You cannot set an option.	Make sure that you press only the wanted button(s).
The drum is empty and the display shows there is some weight in.	Press button Auto Off to deactivate the appliance and activate it again to set a tare.

Problem	Possible solution
The drum is full but the display shows 0.0 kg.	You loaded the laundry before activating the appliance. Press button Auto Off to deactivate the appliance. Empty the drum and obey to the necessary steps. (Refer to 'Loading the laundry')
The drum light does not go on.	Make sure that you activate the appliance. Refer to 'Daily Use'.

After the check, activate the appliance. The programme continues from the point of interruption.
If the problem occurs again, contact the Authorised Service Centre.
If the display shows other alarm codes. Deactivate and activate the appliance. If the problem continues, contact the Authorised Service Centre.

14. EMERGENCY DOOR OPENING

In case of power failure or appliance failure the appliance door remains locked. The washing programme continues, when the power is restored. If the door remains locked in case of failure, it is possible to open it using the emergency unlock feature.

Before opening the door:

CAUTION!
Make sure that the water temperature and the laundry are not hot. Wait till they cool down, if necessary.

CAUTION!
Make sure that the drum is not rotating. Wait till the drum stops rotating, if necessary.

Make sure that the water level inside the drum is not too high. Proceed with an emergency drain, if necessary (refer to «Emergency drain» in «Care and cleaning» chapter).

To open the door, proceed as follows:

1. Press the button AutoOff to switch the appliance off.
2. Disconnect the mains plug from the mains socket.
3. Open the filter flap.
4. Keep the emergency unlock trigger pulled downward and, at the same time, open the appliance door.

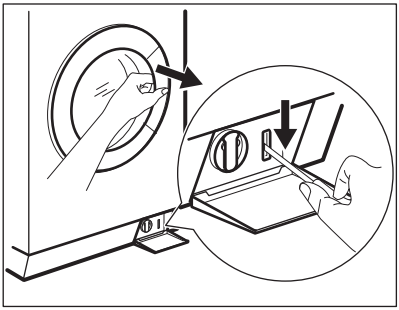

5. Take out the laundry and then close the appliance door.
6. Close the filter flap.

15. TECHNICAL DATA

Dimension	Width/ Height/ Depth/ Total depth	600 mm/ 850 mm/ 605 mm/ 639 mm
Electrical connection	Voltage Overall power Fuse Frequency	230 V 2200 W 10 A 50 Hz
Level of protection against ingress of solid particles and moisture ensured by the protective cover, except where the low voltage equipment has no protection against moisture		IPX4
Water supply pressure	Minimum Maximum	0,5 bar (0,05 MPa) 8 bar (0,8 MPa)
Water supply [1)]		Cold water
Maximum Load	Cotton	10 kg
Energy Efficiency Class		A+++
Spin Speed	Maximum	1400 rpm

[1)] Connect the water inlet hose to a water tap with a 3/4" thread.

15.1 Additional technical data

Brand logo	ELECTROLUX	
Name of the distributor	Electrolux Lehel Kft 1142 Budapest Erzsébet kir.né útja 87	
Model denomination	EWF 1408 WDL2	
	Measure unit	
Energy class	(on scale from **A** to **D**, where A - most effective and D - least effective)	A+++
Washing performance	(on scale from **A** to **G**, where A - higher and G - lower performance)	A
Spin drying performance	(on scale from **A** to **G**, where A - better and G - worse)	B
Residual humidity	%	52
Maximum spin speed	rpm	1400
Wash load	kg	10
Average annual energy[1)]	kWh	189

Average annual water consumption [1]	litres	12290
Washing noise on normal 60° C cotton programme	dB/A	51
Spinning noise on normal 60° C cotton programme	dB/A	76

[1] Complies with EN60456.

16. ENVIRONMENT CONCERNS

Recycle the materials with the symbol ♲. Put the packaging in applicable containers to recycle it. Help protect the environment and human health and to recycle waste of electrical and electronic appliances. Do not dispose appliances marked with the symbol with the household waste. Return the product to your local recycling facility or contact your municipal office.

www.electrolux.com/shop

132899910-B-282015

CE