Users Manual

ZM500/600-LX

Two Forward Switching Power Supply

※ To ensure safe and easy installation, please read the following precaution.s

www.ZALMAN.com

Ver.130426

1. Warnings and Safety Precautions

Warning — Neglecting the following may cause serious injury or death.

- Opening the cover of the product while the power cord is plugged into an outlet may cause electrocution or critical damage to the product.
- Handling the power cord with wet hands may cause electrocution.
- Inserting fingers or metallic objects into the cooling fan may cause injury or electrocution.

Caution — Neglecting the following may cause minor injuries, degrade product conditions or cause malfunction.

- Operating the product in an extremely cold or hot environment can degrade product performance and lifespan.
- Exposure to liquids may cause malfunction.
- Operation in a humid or non-ventilated environment may reduce product lifespan.
- Plugging the main power connector P1 into the motherboard while the product is connected to the AC power source may cause damage to the motherboard.
- Make sure that the connectors are connected to their designated locations, and that the connectors are not oriented in the wrong direction when connecting the DC output connectors.
- Please use gloves to prevent injuries during installation.
- Product designs and specifications may be revised without prior notification to improve quality and performance.

Disclaimer) Zalman Tech Co., Ltd. is not responsible for any damages due to external causes, including but not limited to, improper use, problems with electrical power, accident, neglect, alteration, repair, improper installation, or improper testing.

2. Components

Power Supply

Four Screw

Five Cable Ties

AC Power Cord

User's Manual

3. Specifications

1)ZM500-LX Electrical & Physical Specifications

AC Input Range	Voltage	200~240VAC±10%
	Frequency	50Hz ~ 60Hz±3
AC Input Current	Voltage	200~240VAC
	Current	5A
PFC Type		Active PFC
Power Factor Correction		Max 99%
Inrush Current Limit (@ Cold Start at 25℃)	115VAC	-
	230VAC	Max 100A
Efficiency		Max 84% @230VAC, Typical load

DC Output Voltage Regulation				
	Vout	Regulation Range		
	+3.3VDC	±5%	+3.14 ~ +3.47V	At Full Load
	+5VDC	±5%	+4.75 ~ +5.25V	
	+12VDC	±5%	+11.4 ~ +12.6V	
	-12VDC	±10%	-10.8 ~ -13.0V	
	+5VSB	±5%	+4.75 ~ +5.25V	

DC Output Ripple & Noise			
	Vout	Standard Range	
	+3.3VDC	50mV	At Full Load
	+5VDC	50mV	
	+12VDC	120mV	
	-12VDC	120mV	
	+5VSB	50mV	

Vout	Output Load Rating I_{min}	I_{max}	I_{peak}	Combined Power	
+3.3V	0.1A	18A		120W	500W
+5V	0.2A	15A			
+12V	0.1A	37A	40A	444W	
-12V	0.0A	0.3A		3.6W	
+5VSB	0.0A	2.0A	2.5A	10W	

Ambient Temperature	
Operation	0 ~ +40℃
Storage	-20 ~ +70℃
Ambient Humidity	
Operation	5% ~ 95% RH
Storage	5% ~ 95% RH
Dimensions	140(L)*150(W)*86(H)mm
Weight	1.9kg

Protection Funtions
Over-Voltage Protection (OVP)
Under Voltage Protection (UVP)
Over-Current Protection (OCP)
Short- Cicuit Protection (SCP)
Over-Power Protection (OPP)

2) ZM500-LX Cable Specifications

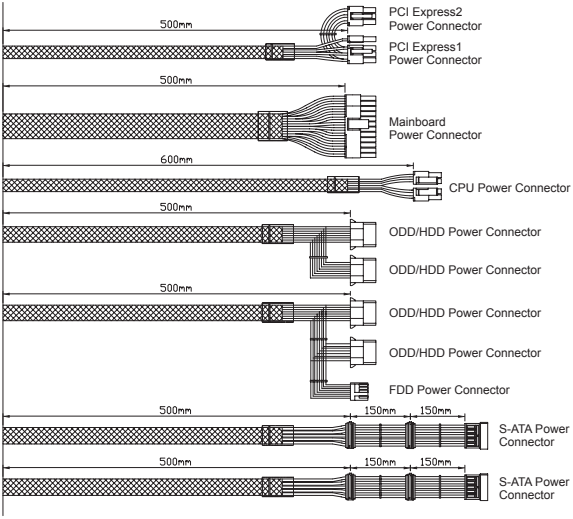

3. Specifications

3) ZM600-LX Electrical & Physical Specifications

AC Input Range	Voltage	200~240VAC ±10%			Vout	Output Load Rating			Combined Power	
	Frequency	50Hz ~ 60Hz ±3				I_{min}	I_{max}	I_{peak}		
AC Input Current	Voltage	200~240VAC			+3.3V	0.1A	24A		130W	600W
	Current	6A			+5V	0.2A	16A			
PFC Type	Active PFC				+12V	0.1A	45A	48A	540W	
Power Factor Correction	Max 99%				-12V	0.0A	0.3A		3.6W	
Inrush Current Limit (@ Cold Start at 25℃)	115VAC	-			+5VSB	0.0A	2.0A	2.5A	10W	
	230VAC	Max 120A			Ambient Temperature					
Efficiency	Max 84% @230VAC, Typical load				Operation	0 ~ +40℃				
DC Output Voltage Regulation	Vout	Regulation Range		At Full Load	Storage	-20 ~ +70℃				
	+3.3VDC	±5%	+3.14 ~ +3.47V		Ambient Humidity					
	+5VDC	±5%	+4.75 ~ +5.25V		Operation	5% ~ 95% RH				
	+12VDC	±5%	+11.4 ~ +12.6V		Storage	5% ~ 95% RH				
	-12VDC	±10%	-10.8 ~ -13.0V		Dimensions	140(L)*150(W)*86(H)mm				
	+5VSB	±5%	+4.75 ~ +5.25V		Weight	1.95kg				
DC Output Ripple & Noise	Vout	Standard Range		At Full Load	Protection Funtions					
	+3.3VDC	50mV			Over-Voltage Protection (OVP)					
	+5VDC	50mV			Under Voltage Protection (UVP)					
	+12VDC	120mV			Over-Current Protection (OCP)					
	-12VDC	120mV			Short- Cicuit Protection (SCP)					
	+5VSB	50mV			Over-Power Protection (OPP)					

4) ZM600-LX Cable Specifications

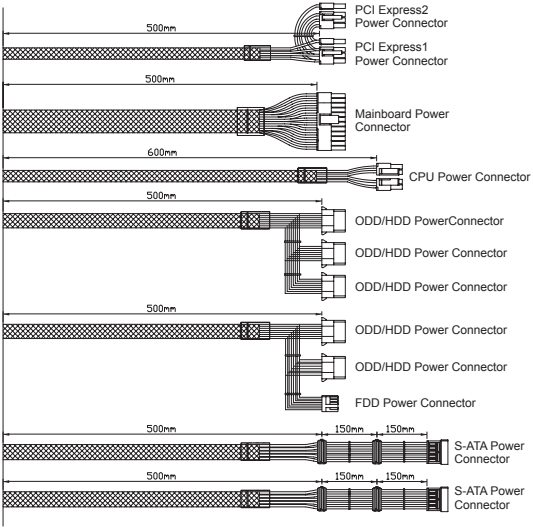

4. Certifications