Alienware AW3418DW/AW3418HW

ALIENWARE

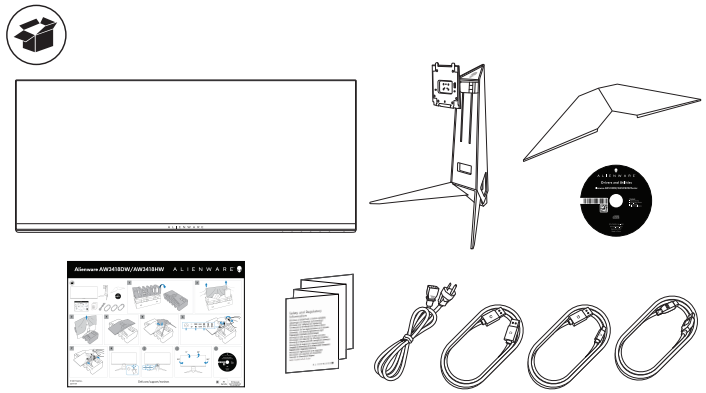

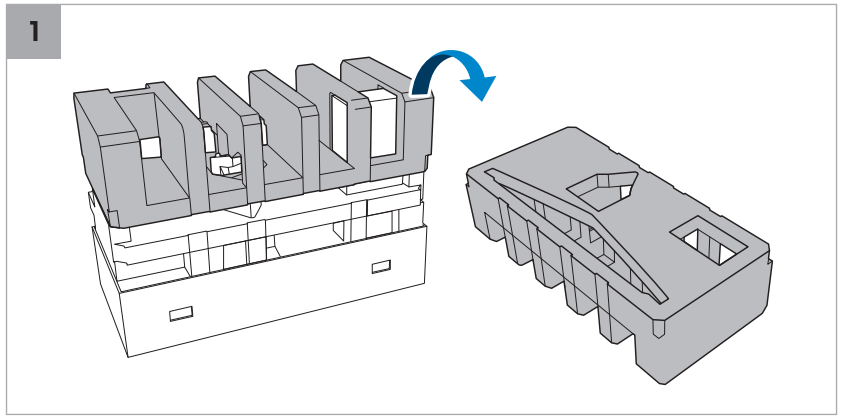

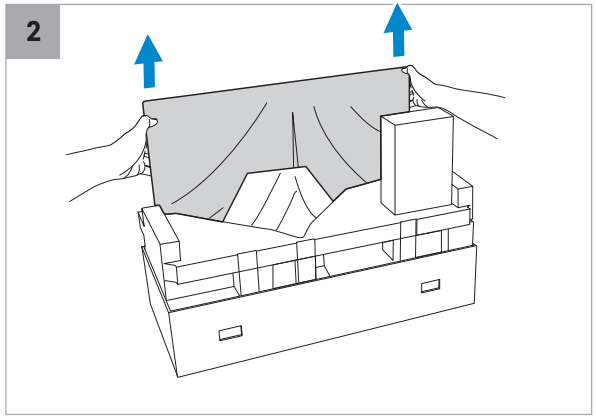

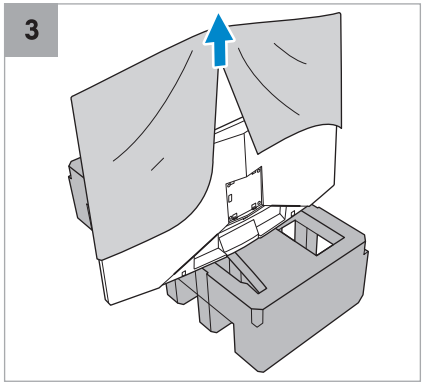

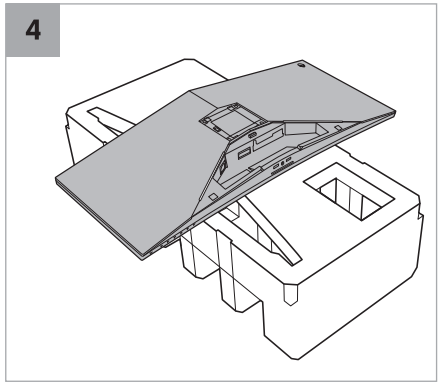

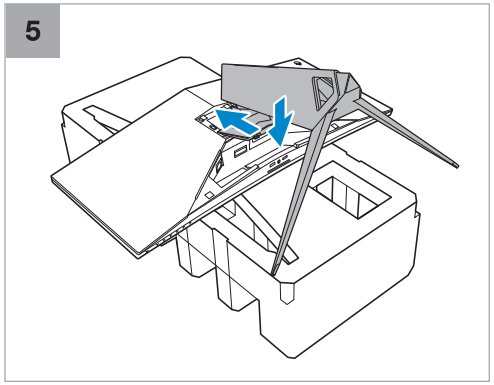

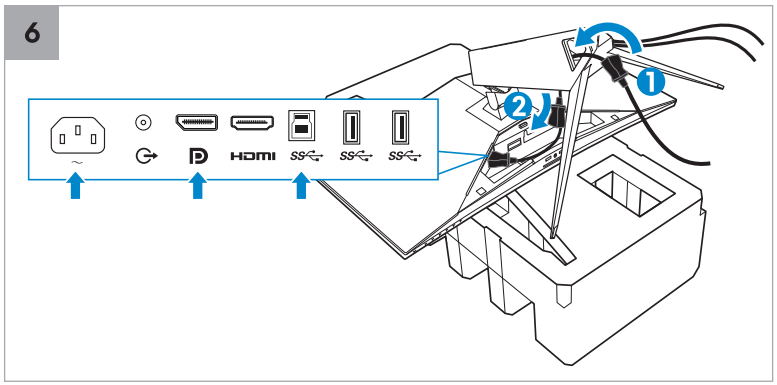

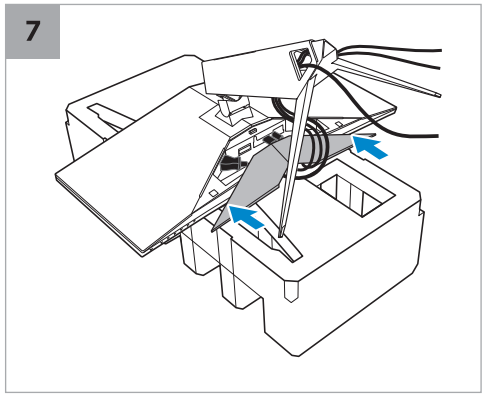

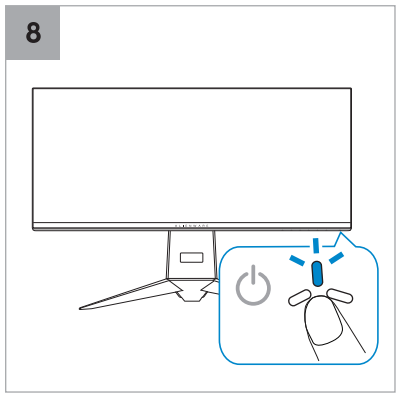

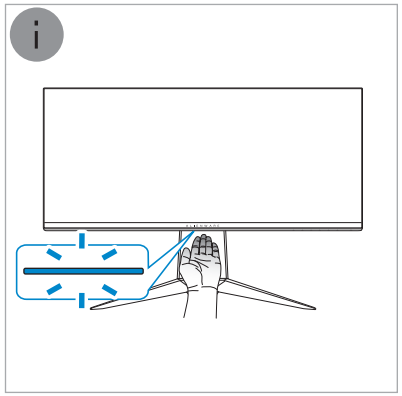

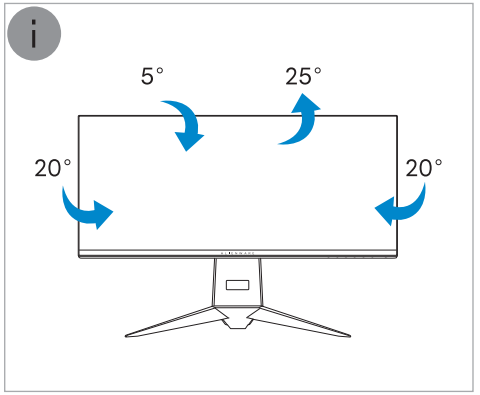

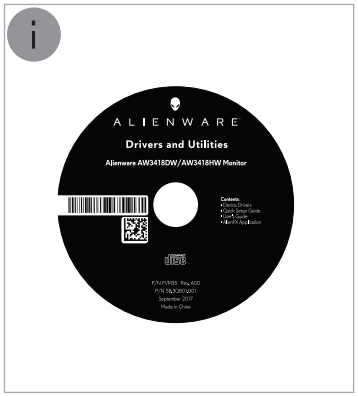

© 2017 Dell Inc.
2017-09

Dell.com/support/monitors

EAC

2D barcode

1D Barcode
(Dell P/N:VMHMR A00)
P/N: 4J.3QB01.001