SONY

Television

Getting Started [1]

- Using the Help Guide [2]
- Keeping the TV updated [3]
- Introducing Android TV [4]
  - Displaying the picture in a small screen [5]
  - Downloading apps from the Google Play [6]
  - Moving apps to a USB memory device [7]
  - Viewing Internet media [8]
  - Enjoying content from your mobile device on the TV with Google Cast [9]
  - Enjoying safe apps and video streaming services (Security & restrictions) [10]
  - Searching by using your voice [11]
- Basic Operations [12]
  - Using the remote control [13]
  - Home menu [14]
  - Using the TV Menu Bar [15]
  - Using the “Content Bar” (DISCOVER) [16]
  - Using the Action Menu [17]
  - Selecting devices that are connected to the TV [18]
  - Illumination LED [19]
- Accessibility features [20]
- Support Site [21]

Watching TV [22]

- Watching TV programmes [23]
  - Using the programme guide [24]
  - Configuring channel settings [25]
    - Receiving digital broadcasts [26]
    - Receiving satellite broadcasts (satellite compatible models only) [27]
    - Sorting channels or editing the programme list [28]
  - Using interactive broadcast TV services [29]

- Understanding the information banner icons [30]
- Watching TV programmes using YouView (U.K. models only) [31]
- Watching in 3D (3D models only) [32]
  - Understanding the basics of 3D TV (3D models only) [33]
  - Preparing your 3D glasses (3D models only) [34]
  - Watching TV in 3D (3D models only) [35]

Recording TV Programmes [36]

- Recording to a USB HDD device (USB HDD recording models only) [37]
  - Registering a USB HDD device (USB HDD recording models only) [38]
  - One-touch recording (USB HDD recording models only) [39]
  - Timer recording (USB HDD recording models only) [40]
  - Information about using a USB HDD device for recording (USB HDD recording models only) [41]
- Watching/deleting recorded content (USB HDD recording models only) [42]
- Understanding the symbols displayed in the recorded title list (USB HDD recording models only) [43]

Using the TV with Other Devices [44]

- USB devices [45]
  - Playing content stored on a USB device [46]
  - Information about USB devices used for storing photos and music [47]
  - Supported files and formats [48]
    - Photos [49]
    - Music [50]
    - Videos [51]
    - Audio sampling rates (for videos) [52]
    - External subtitles [53]
- Blu-ray and DVD players [54]
  - Connecting a Blu-ray or DVD player [55]
  - Watching Blu-ray and DVD discs [56]
- Set-top box (cable/satellite box) with an IR Blaster (IR Blaster compatible models only) [57]
  - Connecting an IR Blaster (IR Blaster compatible models only) [58]
  - Setting up the IR Blaster to control the set-top box (cable/satellite box) (IR Blaster

compatible models only) [59]
- Smartphones and tablets [60]
  - Displaying the screen of a smartphone/tablet on the TV using the Screen mirroring function [61]
- Computers, cameras, and camcorders [62]
  - Connecting a computer and viewing stored content [63]
  - Connecting a camera or camcorder and viewing stored content [64]
  - Computer video signal specifications [65]
- Audio system [66]
  - Connecting an audio system [67]
  - Adjusting audio system-related settings [68]
- Bluetooth devices [69]
  - Connecting a Bluetooth device [70]
  - Adjusting the AV sync setting [71]
  - Supported Bluetooth profiles [72]
- Sony wireless subwoofer (optional) (Sony wireless subwoofer supported models only) [73]
  - Connecting a wireless subwoofer (optional) [74]
  - Adjusting wireless subwoofer-related settings (optional) [75]
- BRAVIA Sync-compatible devices [76]
  - BRAVIA Sync overview [77]
  - Using features available for BRAVIA Sync-compatible devices [78]
  - Adjusting BRAVIA Sync settings [79]
- Viewing pictures in 4K from compatible devices (4K models only) [80]
  - Viewing pictures in 4K resolution (4K models only) [81]
  - Settings for viewing pictures in 4K resolution with higher quality (4K models only) [82]

Connecting to a Network [83]

- Connecting to a network using a LAN cable [84]
- Connecting to a network using a wireless connection [85]
  - Using Wi-Fi to connect the TV to your network [86]
  - Using Wi-Fi Direct to connect to the TV (no wireless router required) [87]
- Home network features [88]

- Adjusting home network settings [89]
- Playing content from a computer [90]
- Playing content from a media server [91]

Settings [92]

- Configuring the TV [93]
  - [TV] [94]
  - [Network & Accessories] [95]
  - [System Preferences] [96]
  - [Personal] [97]
  - [Accounts] [98]
  - [Expert panel settings](only models equipped with an OLED panel) [99]
- Setting a timer [100]

Troubleshooting [101]

- Start here [102]
  - Self diagnostics [103]
  - Software updates [104]
  - If a full reset (restart) of the TV is required [105]
  - Frequently Asked Questions for Troubleshooting [106]
- Picture (quality)/screen [107]
  - Picture quality is not as good as viewed at the store. [108]
  - Distorted picture. [109]
  - The screen flickers. [110]
  - No colour/Dark picture/Colour is not correct/Picture is too bright. [111]
  - Dark screen. How to brighten the screen. [112]
  - Colour is not correct. How to adjust the colour tone. [113]
  - Screen format/wide mode changes automatically. [114]
  - The screen suddenly changes to a video you do not recognise while watching TV. [115]
  - Suddenly the picture becomes small. [116]
  - Black bands appear at the edges of the screen. [117]
  - There are banners/tickers at the top or bottom of the screen. [118]
  - 3D pictures are not displayed. The 3D effect is weak. (3D models only) [119]
  - Black bars appear on both sides of the screen when watching 3D pictures. (3D

models only) [120]
- You cannot turn off 3D display while watching 3D content. (3D models only) [121]
- The message [3D signal is detected.] automatically appears when 3D signal is detected. (3D models only) [122]
- A message about an app asking for permission to access a TV function is displayed. [123]
- The screen becomes darker after a certain period of time. (only models equipped with an OLED panel) [124]
- The message [Panel refresh did not finish] is displayed. (only models equipped with an OLED panel) [125]
- You are concerned about an image retention. (only models equipped with an OLED panel) [126]
- A white line appears on the screen. (only models equipped with an OLED panel) [127]
- Panel refresh does not complete. (only models equipped with an OLED panel) [128]

- Keyboard [129]
- Broadcast reception [130]
  - Check these things first to troubleshoot your TV reception. [131]
  - Block noise or an error message appears and you cannot watch broadcasts. [132]
  - Ghosting or double images appear. [133]
  - Only snow noise or a black picture appears on the screen. [134]
  - There is picture or sound noise when viewing an analogue TV channel. [135]
  - Some channels are blank. [136]
  - Poor reception or poor picture quality with digital broadcasts. [137]
  - You cannot view digital channels. [138]
  - Not all analogue channels are tuned. [139]
  - You cannot view satellite channels. (Satellite compatible models only) [140]
  - Some digital channels are missing. [141]
  - You want to tune your satellite dish. [142]
- Sound [143]
  - No sound but good picture. [144]
  - Audio noise. [145]
  - No audio or low audio with a home theatre system. [146]
  - Distorted sound. [147]

- Headphone/Bluetooth audio device volume cannot be adjusted. [148]
- You want to output sound from both the headphones/Bluetooth audio device and the TV speakers. [149]
- You are concerned about a delay between the picture and sound. [150]

- Network (Internet/home)/apps [151]
  - The network name (SSID) of the wireless router to which you want to connect is not displayed. [152]
  - Sometimes video streaming quality is poor. [153]
  - Wi-Fi connection is lost or intermittent. [154]
  - Certain Internet video content displays a loss of detail. [155]
  - Good picture quality but no sound on Internet video content. [156]
  - Apps are inaccessible. [157]
  - The TV cannot access the Internet when IPv6 is set. [158]
  - Your TV cannot connect to the server. [159]
  - A message appears stating that the TV cannot connect to your network. [160]
  - You can connect to the Internet, but not to Google services. [161]
- Remote control/accessories [162]
  - The remote control does not operate. [163]
  - You cannot turn the Active 3D Glasses on. (3D models only) [164]
  - The LED indicator on the Active 3D Glasses blinks. (3D models only) [165]
- Power [166]
  - The TV turns off automatically. [167]
  - The TV turns on automatically. [168]
  - After turning on the TV, it turns off immediately. [169]
  - After unplugging the TV and plugging it in again, the TV does not turn on even if you press the power button on the remote control or the TV. [170]
- Connected devices [171]
  - No picture from a connected device. [172]
  - You cannot select a connected device in the Home Menu. [173]
  - Certain programmes on digital sources display a loss of detail. [174]
  - Photo images or folders take time to display. [175]
  - You cannot find a connected BRAVIA Sync HDMI device. [176]
  - The EXT.BOX MENU button on the remote control does not work. [177]
  - You cannot turn off the set-top box (cable/satellite box) using the TV's remote control

through the IR Blaster function. [178]
- You cannot control a second AV receiver. [179]
- An external device (such as a set-top box or AV receiver) cannot be controlled via the IR Blaster. (IR Blaster compatible models only) [180]
- Some media files in the USB device or server are not displayed. [181]
- The TV cannot be found by a Wi-Fi Direct device. [182]
- Operation cuts out, or a device does not work. [183]
- What kind of devices can be connected using the Screen mirroring function? [184]
- The TV cannot connect to a Miracast device or Screen mirroring compatible device. [185]
- Video or sound sometimes cuts out. [186]
- Some paid content cannot be played. [187]

- USB HDD recording (USB HDD recording models only) [188]
  - You cannot use a USB HDD device. (USB HDD recording models only) [189]
  - The USB HDD device cannot be registered. (USB HDD recording models only) [190]
  - Recording cannot be performed./Recording failed. (USB HDD recording models only) [191]
  - Recorded content disappeared. (USB HDD recording models only) [192]
  - The USB HDD device operates even though it is not turned on. (USB HDD recording models only) [193]
- Illumination LED [194]
  - The illumination LED sometimes lights up. [195]
  - You want to disable the illumination LED so that it does not light up or blink. [196]

Index [197]

[1]

Getting Started

Using the Help Guide
Keeping the TV updated
Introducing Android TV
Basic Operations

Accessibility features

Support Site

[2] Getting Started

Using the Help Guide

This Help Guide explains how to use this TV. Additionally, you can also refer to the Setup Guide for descriptions about TV installation, and the Reference Guide for parts descriptions and specifications of this TV.

In this Help Guide, you can read the desired information in order or search for it directly. To search, select at the top of the screen.

Help Guide versions

There are two versions of the Help Guide for your TV: the Built-in Help Guide and the Online Help Guide. To view the Online Help Guide, your TV must be connected to the Internet. To switch between the Built-in and Online versions, use the switch button (A) at the top of the screen. You can check which Help Guide is currently displayed by looking at the title at the top of the screen.

1 **Connect the TV to the Internet.**

2 **Select (A) to switch the Help Guide version.**

Note

- To use the latest features described in the Help Guide, you may need to update the TV's software. For details about software updates, see the Software updates page.
- The images and illustrations used in the Help Guide may differ depending on your TV model.
- Design and specifications are subject to change without notice.

Hint

- To see if your TV is equipped with one of the functions described in the Help Guide, refer to the paper manual or a Sony product catalogue.
- This Help Guide is written for all regions/countries. Some descriptions contained in this Help Guide do not apply to some regions and countries.

Related topics

- Connecting to a network using a LAN cable
- Using Wi-Fi to connect the TV to your network

[3] Getting Started

Keeping the TV updated

The functions below are performed when the TV is in standby mode. To keep your TV updated, we recommend that you turn off the TV normally by using the power button on the remote control or TV.

- Download of data such as programme guides
- Software download (when [Automatic software download] is enabled)

[4] Getting Started

Introducing Android TV

Displaying the picture in a small screen
Downloading apps from the Google Play
Moving apps to a USB memory device
Viewing Internet media
Enjoying content from your mobile device on the TV with Google Cast
Enjoying safe apps and video streaming services (Security & restrictions)
Searching by using your voice

[5] Getting Started | Introducing Android TV

Displaying the picture in a small screen

You can display the picture that you are watching (TV programmes or content from HDMI-connected devices) as a small screen in the corner.

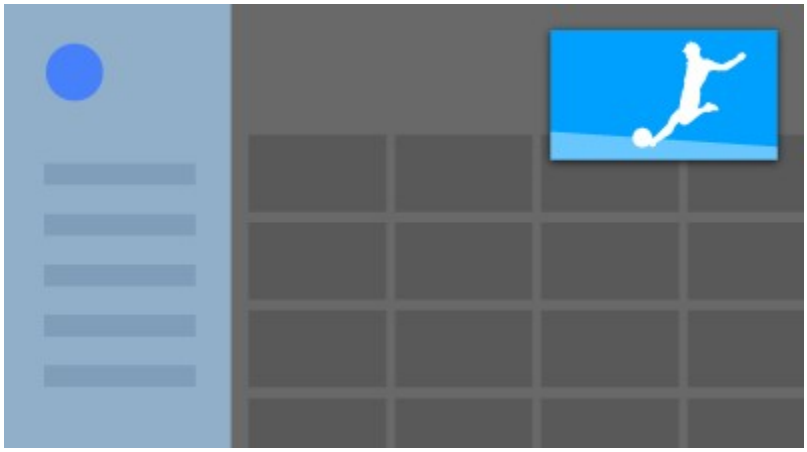

Displaying the picture as a small screen

1 **Press the ACTION MENU button while watching a TV programme or content from an HDMI device, and then select [Picture-in-picture].**
The current picture is displayed as a small screen in the corner.

Note

- The small screen is displayed on top of the last app used. However, the app that is displayed may vary depending on certain conditions.
- Operations such as changing the channel is disabled while watching with a small screen.
- TV programme, external input such as an HDMI device, apps that play back movies, or some apps that play back pictures or music cannot be displayed at the same time.
- The position of the small screen is automatically adjusted. You cannot set it manually.

Closing the small screen or returning it to full screen

1 **Press and hold the HOME button to display a list of recently used apps.**

2 **Close the small screen by selecting the desired button under the small screen, or return it to full screen (A).**

The image below is a visual representation and may vary from the actual screen.

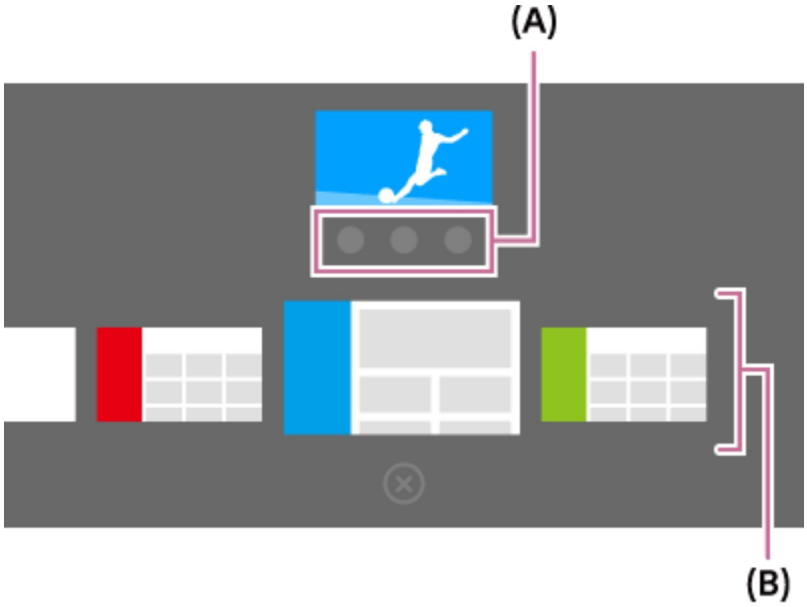

A list of recently used apps (B) is displayed under the small screen.

Note

- If you switch to an app that plays back movies, pictures, or music from the list of recently used apps, the small screen closes (the TV programme or playback from the HDMI device closes). To return to the TV programme or HDMI device, press the TV button or switch the input.

---

[6] Getting Started | Introducing Android TV

Downloading apps from the Google Play

You can download apps from the Google Play to the TV, just like you do with smartphones and tablets.

Note

- You can only download apps that are compatible with TVs. They may differ from apps for smartphones/tablets.
- An Internet connection and Google account are required to download apps from the

Google Play.

Hint

- If you do not have a Google account or want to create a shared account, create a new account by accessing the following website.
  https://accounts.google.com/signup
  The website above may vary depending on your region/country. It is also subject to change without notice. For details, refer to the Google homepage.
- We recommend that you create a Google account on a computer or mobile device.

1. **Press the HOME button, then select [Google Play Store] under [Apps].**
2. **To install an app, select an app you want to download. The app will start downloading.**

After downloading, the app is automatically installed and added. Its icon appears in the Home Menu, allowing you to launch it.

About paid apps

There are free apps and paid apps in the Google Play. To purchase a paid app, a prepaid Google Play gift card code or credit card information is required. You can purchase a Google Play gift card from various retailers.

To delete an app

1. **Press the HOME button, select [Google Play Store] under [Apps], and then select [My Apps].**
2. **Select an app to be deleted, and then uninstall the app.**

Related topics

- Connecting to a network using a LAN cable
- Using Wi-Fi to connect the TV to your network
- Moving apps to a USB memory device

[7] Getting Started | Introducing Android TV

Moving apps to a USB memory device

You can move downloaded apps to a USB memory device to increase the space available in the TV.

Note

- When you format a USB memory device, all data saved in the USB memory device will be deleted. Back up your important data before formatting.
- Performing this procedure formats the USB memory device for exclusive use with the TV. Therefore, you may be unable to use the USB memory device with a computer, etc.
- Some apps cannot be moved to a USB memory device.

1. **Connect a USB memory device to the TV.**
2. **Press the HOME button, select [Settings] — [Storage & reset] — the desired USB memory device.**
3. **Format it as an internal storage device.**
4. **When formatting is finished, press the HOME button, then select [Settings] — [Apps].**
5. **Select the app that you want to move to the USB memory device.**
6. **Select the USB memory device from the used storage. The app is moved to the USB memory device.**

Hint

- Repeat steps 4 to 6 to move additional apps to the USB memory device.

To remove a USB memory device

1. **Press the HOME button, select [Settings] — [Storage & reset] — the desired**

USB memory device, and then select the option to remove it.

Note

- The USB memory device is used only for saving apps. To use the USB memory device for other purposes, you must format it again.
- If you delete an app in the USB memory device using a computer, you will be unable to launch it from the TV.
- If you remove a USB memory device from the TV, you will be unable to use the apps that were moved to the USB memory device.
- You cannot specify a USB memory device as the installation location of an app. First install the app on the TV as normal, and then move it to the USB memory device.

---

[8] Getting Started | Introducing Android TV

Viewing Internet media

You can use video streaming services such as YouTube and Netflix to watch Internet content. The available services vary depending on your country and region. You can launch these services by selecting their tiles in the Home Menu.

Note

- An Internet connection is required to watch Internet content.

Related topics

- Enjoying safe apps and video streaming services (Security & restrictions)
- Connecting to a network using a LAN cable
- Using Wi-Fi to connect the TV to your network

---

[9] Getting Started | Introducing Android TV

Enjoying content from your mobile device on the TV with Google Cast

---

Google Cast allows you to wirelessly cast content from your favourite websites and apps to your TV, directly from your computer or mobile device.

1. **Connect a mobile device such as a smartphone or tablet to the same home network that the TV is connected to.**
2. **Launch a Google Cast supported app on the mobile device.**
3. **Select the (cast) icon in the app.**
   The screen of the mobile device is displayed on the TV.

Note

- An Internet connection is required to use Google Cast.

Related topics

- Connecting to a network using a LAN cable
- Using Wi-Fi to connect the TV to your network

---

[10] Getting Started | Introducing Android TV

Enjoying safe apps and video streaming services (Security & restrictions)

You can ensure safe use of the TV by setting installation restrictions on apps that are downloaded from unknown sources, or age restrictions on programmes and videos.

1. **Press the HOME button, then select [Settings] — then options such as [Security & restrictions] or [Parental lock (Broadcast)].**

Note

- If you change the [Security & restrictions] settings, your device and personal data are more vulnerable to attack by unknown apps from sources other than Play Store. You agree that you are solely responsible for any damage to your device or loss of data that may result from using these apps.

Hint

- Other separate restrictions may be available depending on the app. For details, refer to the app's help guide.

---

[11] Getting Started | Introducing Android TV

Searching by using your voice

The TV includes a Voice Search feature that enables you to search the Internet for content you're looking for with your voice. Voice Search allows you to quickly input search queries without the use of the on-screen keyboard.

To search, simply press the button and speak into the microphone built into your remote control.

For details, please refer to Using the remote control.

---

[12] Getting Started

Basic Operations

Using the remote control
Home menu
Using the TV Menu Bar This feature is available for TVs in which the included remote control does not have a DISCOVER button.
Using the "Content Bar" (DISCOVER) This feature is available for TVs in which the included remote control has a DISCOVER button.
Using the Action Menu
Selecting devices that are connected to the TV
Illumination LED

---

[13] Getting Started | Basic Operations

Using the remote control

You can operate many of the TV's features by using the ↑ / ↓ / ← / → and ⊕ buttons.

For descriptions of the remote control buttons, refer to the Reference Guide.

1 **Use the ↑ , ↓ , ← and → buttons to "focus" on the desired item.**

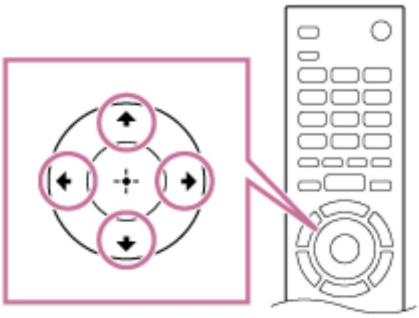

2 **Press the centre of the ⊕ button to select the item currently in focus.**

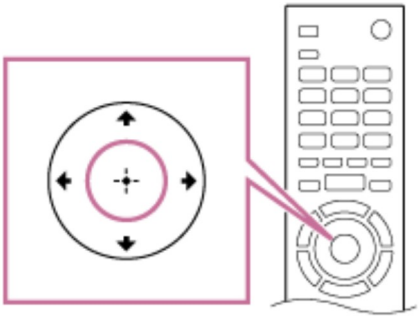

To return to the previous screen

Press the BACK button.

Using Voice Search (Voice Search supported models only)

For Voice Search supported models, the remote control has a built-in microphone. By speaking into the microphone, you can search for content on the Internet.

1 **Press the 🎤 button .**
The LED on the remote control will light up.

2 **Speak into the built-in microphone.**
Speech examples may be displayed depending on your model.

When your voice is not being recognised

Confirm the following:

- The button is activated.

To confirm these settings, press the HOME button, then select [Settings] — [Voice Remote Control].

Note

- An Internet connection is required to use Voice Search.
- The type of remote control supplied with the TV, and the availability of a remote control with a built-in microphone varies depending on your model/region/country. An optional remote control is available in some models/regions/countries.

Related topics

- The remote control does not operate.
- Connecting to a Network

[14] Getting Started | Basic Operations

Home menu

The Home Menu allows you to search for content, provides content recommendations, and provides access to apps and settings. Available items vary depending on your region/country and the current screen.

Searching

You can search for various content by entering a search keyword using the on-screen keyboard or by voice. The availability of the remote control with a built-in microphone

depends on your model/region/country.

1 **Press the HOME button.**

2 **Select the microphone icon at the top of the screen.**

3 **Enter a search keyword by speaking into the microphone on the remote control, or by pressing the ➡ button and then using the on-screen keyboard.**

Browsing for content, apps, or other items

1 **Press the HOME button.**

2 **Select the desired item from the desired category.**

Category list

Recommendations

This category shows content based on your history.

[Featured apps], [Apps] and [Games]

These categories provide access to apps (such as Video, Album, Music, and Screen mirroring) and games.

[Inputs]

You can select the input source from the list of connected devices and jacks (sockets), such as HDMI.

[Settings]

This category includes [Settings], [Network Settings], [Timers], and [Help].

Hint

- By connecting the TV to the Internet, you can access various network services and features.

Related topics

- Connecting to a network using a LAN cable
- Using Wi-Fi to connect the TV to your network

[15] Getting Started | Basic Operations

Using the TV Menu Bar

This feature is available for TVs in which the included remote control does not have a DISCOVER button.

Press the TV button while watching a TV broadcast to display the TV Menu Bar. The TV Menu Bar allows access to your Favourite channels and displays the TV Menu, which allows access to the programme list, recorded title list, or timer list.

1. **Press the TV button while watching a TV broadcast.**
   The TV Menu Bar is displayed at the bottom of the screen.
2. **Move the focus up or down to select the desired category.**
3. **Move the focus left or right to select the desired item.**
4. **Press the ⊕ button to launch the selected item.**

Adding channels to favourites

1. **Press the TV button while watching a TV broadcast.**
   The TV Menu Bar is displayed at the bottom of the screen.
2. **Move the focus down to select [Add channels to Favourites].**
3. **Add your favourite channels.**

[16] Getting Started | Basic Operations

Using the “Content Bar” (DISCOVER)

This feature is available for TVs in which the included remote control has a DISCOVER button.

You can use the “Content Bar” to search for various content such as TV programmes and Internet videos. The content displayed in the “Content Bar” varies depending on your model/region/country.

1. **Press the DISCOVER button.**
   The “Content Bar” is displayed at the bottom of the screen.

2. **Move the focus up or down to select the desired category.**

3. **Move the focus left or right to select the desired item.**

4. **Press the ⊕ button to launch the selected item.**

To change the settings of this function

1. **Press the DISCOVER button.**
   The “Content Bar” is displayed at the bottom of the screen.

2. **Move the focus down to the [Settings] category.**

3. **Select the desired item to change the settings.**

Available options

[Show/Hide categories]

Select content categories to be shown in DISCOVER. You cannot hide [Settings].

You can hide [Top Picks] depending on your TV model.

[Reorder categories]

Select a content category to reorder.

[Add channels to Favourites]

Add your favourite channels to DISCOVER.

[Add genre categories]

Add genres to create your own custom content category.

[Add keyword categories]

Add keywords to create your own custom content category.

[Display size]

Select the display size of the menu.

[Sort TV programmes]

Select the type of TV programme sorting.

Note

- Some options may not be available depending on your model/region/country.

---

[17] Getting Started | Basic Operations

Using the Action Menu

By pressing the ACTION MENU button, a menu appears and provides quick access to the functions that are available for the currently displayed screen, such as picture adjustments, sound adjustments, volume adjustment for a connected device (such as headphones), and display/audio settings. The items in the menu differ depending on the selected screen.

1 **Press the ACTION MENU button.**

2 **Move the focus left or right to select the desired category.**

3 **Move the focus up or down to select the desired item.**

4 **Press the button to launch the selected item.**

---

[18] Getting Started | Basic Operations

Selecting devices that are connected to the TV

To use devices that are connected to the TV such as a Blu-ray/DVD player, or to watch TV programmes after using such devices, you must switch the input.

1 **Press the button repeatedly to select the connected device.**

Hint

- You can switch to TV broadcasting by simply pressing the TV button on the remote control.

Switching from the Home Menu

1 **Press the HOME button, then select the input source from [Inputs].**

---

[19] Getting Started | Basic Operations

Illumination LED

You can identify the status of the TV by looking at how the illumination LED lights up.

White “on” or “blinking”	• When the screen is off • When the TV is turning on • When receiving signals from the remote control • When updating the software etc.
Cyan “blinking”	• When a mobile device (smartphone, tablet, etc.) is connecting to the TV on the home network etc.
Amber “on”	• When the on timer is set • When the sleep timer is set • When a recording timer is set (the availability of this function depends on your model/country/region) etc.
Pink “on”	• When the TV is recording (the availability of this function depends on your model/country/region)

Related topics

- Home network features
- Software updates
- Setting a timer
- Recording to a USB HDD device (USB HDD recording models only)

[20] Getting Started

Accessibility features

This TV has user assistive features such as a text-to-speech function for on-screen text, zooming to make text easier to read, and subtitles.

Press the HOME button, then select [Settings] — [Accessibility] to configure the user assistive features.

Hint

- To use text-to-speech on the Help Guide, see the Help Guide in the Sony support website using a computer or smartphone.

  http://www.sony.eu/support/

[21] Getting Started

Support Site

For the latest information and Online Help Guide, please visit the Sony support website:

http://www.sony.eu/support/

[22]

Watching TV

Watching TV programmes
Watching in 3D (3D models only)

[23] Watching TV

Watching TV programmes

Using the programme guide

Configuring channel settings
Using interactive broadcast TV services
Understanding the information banner icons
Watching TV programmes using YouView (U.K. models only)

[24] Watching TV | Watching TV programmes

Using the programme guide

You can quickly find your preferred programmes.

1. **Press the GUIDE button to display the digital programme guide.**
2. **Select a programme to watch.**
   The details of the programme are displayed.
3. **Select [View] to watch the programme.**

To switch the programme guide

You can switch the programme guide to [TV Selections] or [Genre Guide]. Some options may not be available depending on your model/region/country. You can also switch the programme guide to see [Recorded Title List] (USB HDD recording models only) or [Timer list].

1. **Move the focus to the leftmost item, then move left again to open the menu.**
2. **Select the desired programme guide or list.**

To use optional functions

1. **While the programme guide is displayed, press the ACTION MENU button and then select the desired item.**

[25] Watching TV | Watching TV programmes

Configuring channel settings

Receiving digital broadcasts
Receiving satellite broadcasts (satellite compatible models only)
Sorting channels or editing the programme list

[26] Watching TV | Watching TV programmes | Configuring channel settings

Receiving digital broadcasts

1. **Press the HOME button, then select [Settings] — [Channel setup] — [Digital setup] — [Digital tuning] — [Digital auto tuning].**
2. **Follow the on-screen instructions to tune in all available digital channels and store their settings in the TV.**

To change the tuning range

Select [Normal] or [Full] in [Auto tuning range].

[Normal]
Searches for available channels within your region/country.

[Full]
Searches for available channels regardless of region/country.

Hint

- You can retune the TV by running [Digital auto tuning] after moving to a new residence, changing service providers, or to search for newly launched channels.

Related topics

- Some digital channels are missing.

[27] Watching TV | Watching TV programmes | Configuring channel settings

Receiving satellite broadcasts (satellite compatible models only)

Satellite compatible models have [Satellite setup] in [Settings] — [Channel setup] — [Digital setup].

If you have a satellite dish installed, you can view satellite broadcasts by configuring the tuner settings. Refer to the descriptions below to help you determine your type of installation and tune your satellite dish.

1. **Press the HOME button, then select [Settings] — [Channel setup] — [Digital setup] — [Satellite setup] — [Digital satellite tuning].**

Available options

[Antenna configuration]
Selects the type of satellite installation.
Your satellite installation type may be Single Cable Distribution, Fixed Antenna, or DiSEqC.
Single Cable Distribution enables delivery of programmes to multiple receivers over a single coaxial cable. Each receiver or tuner is allocated one user ‘band’.
DiSEqC installations allow you connect to multiple satellite dishes or LNBs if you have them. You can select between them using the TV control.
Fixed Antenna is usually the simplest installation type, in which there is one satellite dish and LNB.

[Band]
Configures the number of user bands allocated to the TV or tuner.

[Band frequency]
Adjusts the frequency of the user bands allocated to the TV or tuner.

[General satellite]/[Other (General satellite)]
Searches for satellite services based on a group of general settings. The setting displayed varies depending on your model.

[DiSEqC Control]
Configures the settings for controlling additional satellite equipment such as satellite

selector switches.

[Scan type]

Full Scan: Scans all available satellite frequencies.

Network Scan: Scans based on predefined network parameters. If services are still missing after performing Network Scan, try Full Scan.

Manual Scan: Allows you to set the scan frequency and other transponder parameters.

Related topics

- You cannot view satellite channels. (Satellite compatible models only)

---

[28] Watching TV | Watching TV programmes | Configuring channel settings

Sorting channels or editing the programme list

You can sort the channel display according to your preferred order.

For satellite channels

1. **Press the HOME button, then select [Settings] — [Channel setup] — [Digital setup] — [Satellite setup] — [Satellite programme list edit].**
2. **Choose the programme you want to move to a new position.**
3. **Choose the new position where you want to move the selected programme.**

For digital channels

1. **Press the HOME button, then select [Settings] — [Channel setup] — [Digital setup] — [Digital tuning] — [Programme list edit].**
2. **Choose the programme you want to move to a new position.**
3. **Choose the new position where you want to move the selected programme.**

For analogue channels

1 **Press the HOME button, then select [Settings] — [Channel setup] — [Analogue setup] — [Programme sorting].**

2 **Choose the programme you want to move to a new position.**

3 **Choose the new position where you want to move the selected programme.**

Note

- Available options may vary depending on your region/country.

---

[29] Watching TV | Watching TV programmes

Using interactive broadcast TV services

To display text information

You can view text and text-based graphical information, including national news, weather information, and TV schedules. You can browse for information that interests you, and then select what information you want to display by entering a number.

1 **Press the button to display text information.**

About the Digital Text Information Service

The digital text service offers rich content with smooth graphics and images. Various features are available, such as page links and easy-to-use navigation. The service is supported by numerous broadcasters. (The availability of this feature depends on your model/region/country.)

About the Digital Interactive Application Service

The interactive application service offers high-quality digital text and graphics, along with advanced options. The service is supported by broadcasters. (The availability of this feature depends on your model/region/country.)

Note

- The interactive service is only available if provided by the broadcaster.

- Available functions and screen content varies depending on the broadcaster.
- If subtitles are selected and you launch a digital text application via the button, subtitles may, under certain circumstances, stop being displayed. When you exit the digital text application, subtitle display will resume automatically.

To use NVOD/MF service

NVOD(Near Video On Demand) and MF(Multi Feed) are standards for broadcasting several programmes at the same time in one channel.

NVOD provides multiple copies of the programme on a staggered schedule, and MF allows you to select the desired programme from several programmes in one channel.

1 **While watching an NVOD/MF channel, press the ACTION MENU button.**

2 **Select [Additional services] — the desired programme.**

Note

- This feature is available when the broadcaster provides NVOD/MF service.

---

[30] Watching TV | Watching TV programmes

Understanding the information banner icons

When changing the channel, an information banner appears briefly. The following icons may appear in the banner.

:Data service (Broadcast application)
:Radio service
:Scrambled/Subscription service
:Multilingual audio available
:Subtitles available
:Subtitles and/or audio available for the hearing impaired
:Recommended minimum age for current programme(from 3 to 18 years)
:Parental lock
:Digital programme lock

AD :Audio available for the visually impaired

:Spoken subtitle audio available

:Multi-channel audio available

Related topics

- Using interactive broadcast TV services
- [Personal]

[31] Watching TV | Watching TV programmes

Watching TV programmes using YouView (U.K. models only)

To enable/disable YouView

1. **Press the HOME button, then select [Settings] — [Channel setup] — [YouView setup].**
2. **Select [Enable YouView] or [Disable YouView], and then select [Yes].**
3. **Follow the set-up procedure.**

To use the YouView Guide

Use the YouView Guide to see what's on now, what's coming up over the next week and to scroll back to catch up on programmes you might have missed from the past seven days.

1. **Press the GUIDE button to display the programme guide.**
2. **Press the ← / → buttons to select the programme, then press the ⊕ button.**
   Available programme are marked with a play icon.

Hint

- Press the TV button on the remote control when watching live TV to display the Mini Guide and see what's on TV now and what's on next. However, this function cannot be used in the following cases.
  - When a set-top box is connected to the TV using an IR blaster.
  - On TVs in which the included remote control does not have the DISCOVER button.

To check programme information (Information Panel)

The Information Panel lets you find out more about the programme, the rating and whether it's available in HD. You can also play more episodes from the same series when available on demand.

1 **Press the button.**

To access On Demand, Discover and YouView Search (YouView Menu)

1 **Press the blue button in the YouView Guide or Mini Guide to display YouView Menu.**

2 **Find the programme you want to watch using the following options.**
Players : Access BBC iPlayer, ITV Player, All 4 and Demand 5 on YouView.
Discover : View popular or recently added programmes at a glance. You can also discover new programmes by genre, e.g. Children's, Film etc.
YouView Search : Find a specific live or on demand programme on YouView.

Note

- The following menu items are unavailable when YouView is enabled;
  - Satellite broadcasts
  - Favourites
  - Reminder
  - Digital programme lock
  - Programme list edit
  - Customise TV key
  - Terrestrial programme information from the search function on the Home Menu Screen (use "YouView Search" instead)

- Recording programmes
- Service names are subject to change without notice.

[32] Watching TV

Watching in 3D (3D models only)

Understanding the basics of 3D TV (3D models only)
Preparing your 3D glasses (3D models only)
Watching TV in 3D (3D models only)

[33] Watching TV | Watching in 3D (3D models only)

Understanding the basics of 3D TV (3D models only)

3D models have [3D settings] in [Settings] — [Display].

Recommended viewing distance for a 3D image

If the viewing distance is not appropriate, a double image may appear. Sit at a distance of at least 3 times the height of the screen away from the TV. For the best viewing experience, we recommend that you sit directly in front of the TV.

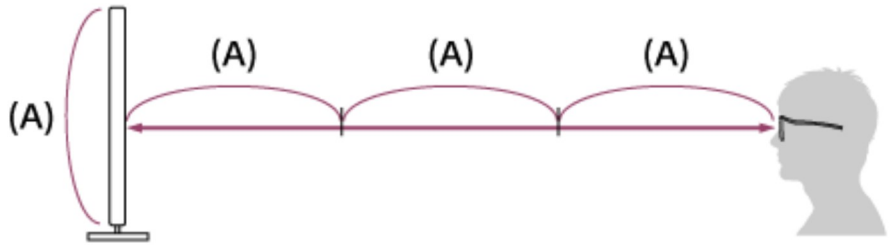

Hint

- There are two types of 3D Glasses: Passive and Active. Refer to the specifications in the Reference Guide to see which type of 3D Glasses the TV supports.

TV and Active 3D Glasses communication range

Active 3D glasses communicate with the TV to show you images in 3D.

Your viewing position needs to be within the proper range. See the following diagrams. The working distance depends on obstacles (people, metal, walls, etc.) and/or electromagnetic interference.

- Overhead view

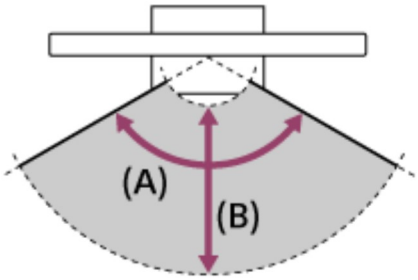

(A) 120°

(B) 1-6 m (3-20 ft.)

- Side view

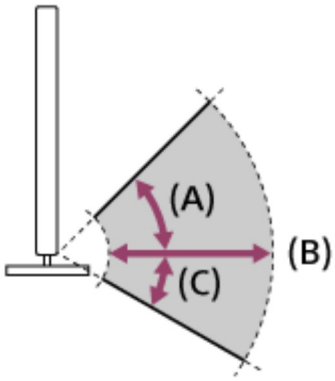

(A) 45°

(B) 1-6 m (3-20 ft.)

(C) 30°

Note

- Recommended viewing angle and distance may vary depending on the TV's location and room conditions.

Caring for your glasses

- Wipe the glasses gently with a soft cloth.
- Stubborn stains may be removed with a cloth slightly moistened with a solution of mild soap and warm water.

- If using a chemically pretreated cloth, be sure to follow the instructions provided on the package.
- Never use strong solvents such as a thinner, alcohol, or benzene for cleaning.

Related topics

- Preparing your 3D glasses (3D models only)
- Watching TV in 3D (3D models only)

[34] Watching TV | Watching in 3D (3D models only)

Preparing your 3D glasses (3D models only)

3D models have [3D settings] in [Settings] — [Display].

There are two types of 3D Glasses: Passive and Active. Refer to the specifications in the Reference Guide to see which type of 3D Glasses the TV supports.

For Passive 3D Glasses

If Passive 3D Glasses are supplied with your TV, use them. If no glasses are supplied, purchase a pair of Passive 3D Glasses, model TDG-500P. You can watch in 3D by just putting the Passive 3D Glasses on.

For Active 3D Glasses

If Active 3D Glasses are supplied with your TV, use them. If no glasses are supplied, purchase a pair of Active 3D Glasses, model TDG-BT500A. Before using the Active 3D Glasses for the first time, you need to register them to your TV. Follow the steps below.

1 **Remove the battery's insulation sheet.**

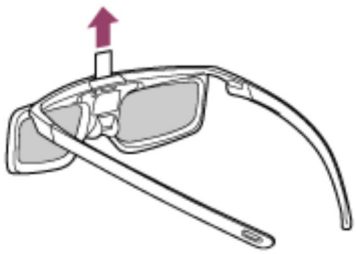

2 **Turn the TV on, then hold the glasses within 50 cm (1.6 ft.) of the TV.**

3 Press and hold the ⏻ (Power) button/indicator on the glasses for 2 seconds.

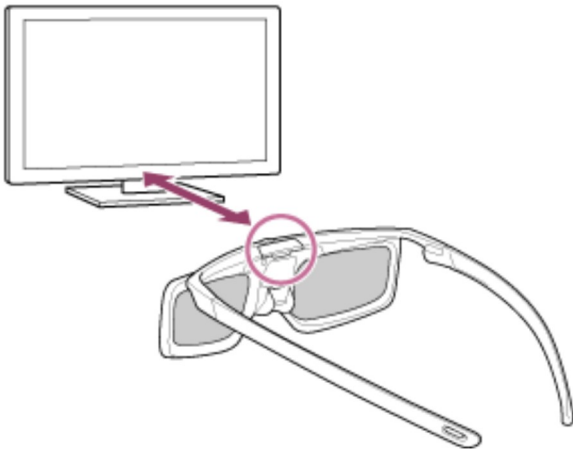

The Active 3D Glasses turn on and registration starts (the ⏻ (Power) button/indicator blinks green and yellow). When registration is finished, a message appears in the TV screen for 5 seconds, and the indicator lights up in green for 3 seconds.

If registration fails, the Active 3D Glasses will turn off automatically. In this case, repeat the procedure above.

4 Put the Active 3D Glasses on.

From the next time, you can use the Active 3D Glasses by just turning them on. To turn them off, press and hold the ⏻ (Power) button/indicator on the glasses for 2 seconds. To turn them on again, press the ⏻ (Power) button/indicator.

Hint

- To use the Active 3D Glasses with another TV, you need to register the glasses to that TV. Perform the procedure above from Step 2.

Related topics

- Understanding the basics of 3D TV (3D models only)
- Watching TV in 3D (3D models only)
- Remote control/accessories

---

[35] Watching TV | Watching in 3D (3D models only)

Watching TV in 3D (3D models only)

3D models have [3D settings] in [Settings] — [Display].

You can experience powerful 3D entertainment, such as stereoscopic 3D games and 3D Blu-ray Discs.

To watch in 3D, connect a 3D-compatible device directly to the TV via an authorised HIGH SPEED HDMI cable bearing the HDMI logo.

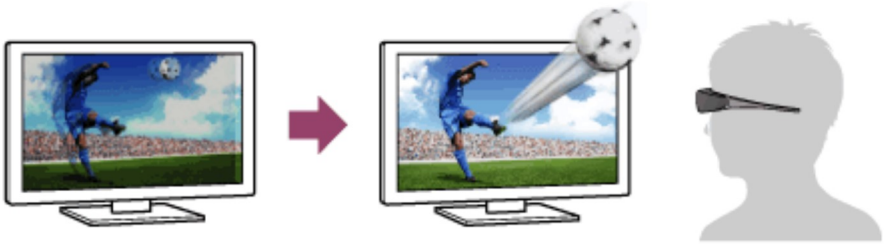

1. **Prepare the 3D Glasses.**
2. **Display the 3D content on the TV screen.**
3. **Put the 3D Glasses on.**
   You should now be able to watch 3D images. If no 3D effect is achieved, perform the following steps.
4. **Press the ACTION MENU button, then select [3D].**
5. **Select the [3D display] mode to suit the displayed content. Depending on the input signal or format, [3D (Side-by-Side)]/[3D (Over-Under)] may not be selectable.**

Hint

- In addition to the [3D display] mode, you can use various 3D options in [3D settings]. Press the HOME button, then select [Settings] — [Display] — [3D settings].

Note

- The 3D effect may be less pronounced if the ambient temperature is low.
- If [Motionflow] in [Picture] is set to something other than [Off], the process to

minimise screen flicker may affect the smooth movement of the picture. In this case, press the ACTION MENU button, then select [Picture] — [Advanced settings] — [Motionflow] — [Off]. (For [Motionflow] compatible models only.)
[Motionflow] compatible models have [Motionflow] in [Settings] — [Display] — [Picture] — [Advanced settings] — [Motion].

Related topics

- Preparing your 3D glasses (3D models only)
- Remote control/accessories

[36]

Recording TV Programmes

Recording to a USB HDD device (USB HDD recording models only)
Watching/deleting recorded content (USB HDD recording models only)
Understanding the symbols displayed in the recorded title list (USB HDD recording models only)

[37] Recording TV Programmes

Recording to a USB HDD device (USB HDD recording models only)

Registering a USB HDD device (USB HDD recording models only)
One-touch recording (USB HDD recording models only)
Timer recording (USB HDD recording models only)
Information about using a USB HDD device for recording (USB HDD recording models only)

[38] Recording TV Programmes | Recording to a USB HDD device (USB HDD recording models only)

Registering a USB HDD device (USB HDD recording models only)

USB HDD recording models have [Recording device setup] in [Settings].

Connect and register a USB HDD device to your TV to record digital broadcasts.

Connect the USB HDD device to the TV's USB port labelled "HDD REC" (if there is a blue USB port, that port supports HDD recording).

Note

- This function is only available on some models in Europe, Australia and New Zealand.

(A) USB HDD device
(B) USB cable (not supplied)

1. **Connect a USB HDD device to the USB3 port (blue) labelled "HDD REC" on your TV.**
2. **Turn the USB HDD device on.**
3. **Wait until the screen [USB drive connected] is displayed.**
4. **Select [Register for recording].**
5. **Follow the on-screen instructions to register the USB HDD device.**

Note

- If the message "Can't detect a USB HDD for recording" is displayed during registration in step 4, follow the instructions in the message and check that the USB

HDD device for recording is connected to the USB3 port (blue) .
If the USB HDD device for recording is not recognised even after you have checked the connection, you must register the USB HDD device again because it is already registered as a device for purposes other than recording ([Device storage]). Refer to "The USB HDD device cannot be registered. (USB HDD recording models only)" to register the USB HDD device again for recording.

Hint

- You can also register a USB HDD device to the TV by selecting [Settings] — [Recording device setup] — [HDD registration].

To deregister a USB HDD device

1 **Press the HOME button, then select [Settings] — [Recording device setup] — [HDD deregistration] — the device to deregister.**

Related topics

- Information about using a USB HDD device for recording (USB HDD recording models only)

---

[39] Recording TV Programmes | Recording to a USB HDD device (USB HDD recording models only)

One-touch recording (USB HDD recording models only)

USB HDD recording models have [Recording device setup] in [Settings].

Note

- This function is only available on some models in Europe, Australia and New Zealand.

1 **While viewing the programme to record, press the REC button.**

2 **In the displayed screen, set the end time for the recording. To record until the programme ends, select [Default]. To set an arbitrary time length (1 minute to 8 hours), select [User Defined].**

To stop recording manually

1 **Press the ■ button.**

2 **Select [Stop] on the displayed screen.**

To change the end time for the recording

1 **Press the ■ button.**

2 **In the displayed screen, select [Modify] to change the end time for the recording.**

Note

- For some programmes the recording cannot be stopped by pressing the ■ button. To stop recording such a programme, press the ACTION MENU button, then select ■ REC stop.

Related topics

- Watching/deleting recorded content (USB HDD recording models only)

---

[40] Recording TV Programmes | Recording to a USB HDD device (USB HDD recording models only)

Timer recording (USB HDD recording models only)

USB HDD recording models have [Recording device setup] in [Settings].

Note

- This function is only available on some models in Europe, Australia and New

Zealand.

1 **Press the GUIDE button.**

2 **Select the desired programme in the programme guide, then select [Timer REC].**

3 **Select [Set Timer As an Event] or [Set timer].**

To manually set the timer by specifying date, time and channel

1 **Press the GUIDE button.**

2 **Move the focus to the leftmost item, then move left again to open the menu.**

3 **Select [Timer list] — [Manual Timer REC].**

4 **Configure the timer setting.**

5 **Select [Set timer].**

To check, modify or delete timer settings

Checking, modifying, or deleting timer settings is performed in [Timer list].

1 **Press the GUIDE button.**

2 **Move the focus to the leftmost item, then move left again to open the menu.**

3 **Select [Timer list], then change the settings.**

Hint

- Up to 32 timer settings can be created.
- If the recording fails, the reason will be listed in [Recording Error List]. Press the HOME button, then select [Programme Guide] — [Recorded Title List] — [Recording Error List].

- In the programme guide, you can move the focus to the desired programme and press the REC button to set the timer recording for the programme.

Note

- Timer recording will not work if the AC power cord (mains lead) is unplugged.

Related topics

- Watching/deleting recorded content (USB HDD recording models only)

---

[41] Recording TV Programmes | Recording to a USB HDD device (USB HDD recording models only)

Information about using a USB HDD device for recording (USB HDD recording models only)

USB HDD recording models have [Recording device setup] in [Settings].

- The USB HDD device must be used exclusively for recording. Use a separate USB HDD device for viewing photos and videos.
- This function is only available on some models in Europe, Australia and New Zealand.
- Only USB HDDs larger than 32 GB are supported.
- Connection of a USB HDD device via a USB hub is not supported. Connect the device directly to the TV.
- Any data stored in the USB HDD device will be erased when it is formatted during the registration process. The USB HDD device cannot be used with a PC once it has been registered to the TV. To enable use of the USB HDD device on a PC, format it on the PC. (Note that any data in the USB HDD device will be erased.)
- A maximum of 8 USB HDD devices can be registered.
- Only this TV will be able to play the data recorded on the USB HDD that has been registered to this TV.
- Recording is supported only for digital TV and radio broadcasts. Recording of data broadcasts is not supported.
- Scrambled/encrypted signals cannot be recorded.
- Recording cannot be performed in the following cases:

  - The TV cannot recognise the registered USB HDD device.
  - More than 1,000 programmes are recorded on the USB HDD device.
  - The USB HDD device is full.
- Automatic selection of the programme may not be possible while it is being recorded.
- Recording a programme is not possible unless its recording has been authorised.
- If using a Conditional Access Module (CAM), avoid using its parental rating protection, which may not work during recording. As an alternative, use programme block or the TV's own parental rating if it is supported by the broadcaster.
- In Norway, some programmes cannot be recorded due to legal restrictions.
- If the TV is subjected to impact during USB HDD recording, noise may occur in the recorded content.
- In no event shall Sony be liable for recording failure or any damage or loss of recorded content caused or associated with the TV's malfunction, signal interference, or any other problem.

---

[42] Recording TV Programmes

Watching/deleting recorded content (USB HDD recording models only)

USB HDD recording models have [Recording device setup] in [Settings].

Note

- This function is only available on some models in Europe, Australia and New Zealand.

To watch recorded content

1. **Press the HOME button, then select [Programme Guide] — [Recorded Title List] — the content to be watched.**

To delete recorded content

1. **Press the HOME button, then select [Programme Guide] — [Recorded Title List].**

2 **Press the ACTION MENU button, then select [Delete] — the content to be deleted — [Delete].**

For information about the meaning of the symbols in the recorded title list, see Understanding the symbols displayed in the recorded title list (USB HDD recording models only).

---

[43] Recording TV Programmes

Understanding the symbols displayed in the recorded title list (USB HDD recording models only)

NEW :Unviewed recording

:Protected recording

:Currently recording

---

[44]

Using the TV with Other Devices

USB devices

Blu-ray and DVD players

Set-top box (cable/satellite box) with an IR Blaster (IR Blaster compatible models only)

Smartphones and tablets

Computers, cameras, and camcorders

Audio system

Bluetooth devices

Sony wireless subwoofer (optional) (Sony wireless subwoofer supported models only)

BRAVIA Sync-compatible devices

Viewing pictures in 4K from compatible devices (4K models only)

---

[45] Using the TV with Other Devices

USB devices

Playing content stored on a USB device
Information about USB devices used for storing photos and music
Supported files and formats

[46] Using the TV with Other Devices | USB devices

Playing content stored on a USB device

Connecting a USB device

Connect a USB storage device to the USB port of the TV to enjoy photo, music, and video files stored on the device.

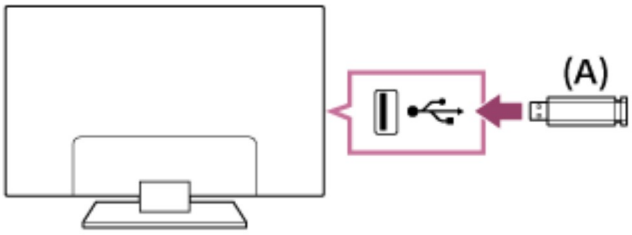

(A) USB storage device

Enjoy photos/music/movies stored on a USB device

You can enjoy photos/music/movies stored on a USB device on the TV screen.

1. **If the USB device connected to the TV has a power switch, turn it on.**
2. **Press the HOME button, then select the desired item.**
   Select [Album] to view photos, [Music] to play music, and [Video] to play movies.
3. **Press the ← button and select [Folders] from the menu that is displayed.**
4. **Browse the list of folders and files and select the desired file.**
   Playback starts.

To check the supported file formats

- Supported files and formats

Note

- All USB ports on the TV support Hi-Speed USB. The blue USB port for 4K models supports SuperSpeed (USB 3.0). USB hubs are not supported.
- While accessing the USB device, do not turn off the TV or USB device, do not disconnect the USB cable, and do not remove or insert recording media. Otherwise, data stored on the USB device may be corrupted.
- Depending on the file, playback may not be possible, even when using the supported formats.

Related topics

- Information about USB devices used for storing photos and music

---

[47] Using the TV with Other Devices | USB devices

Information about USB devices used for storing photos and music

- The USB ports on the TV support FAT16, FAT32, exFAT, and NTFS file systems.
- When connecting a Sony digital still camera to the TV with a USB cable, USB connection settings on your camera need to be set to “Auto” or “Mass Storage” mode.
- If your digital still camera does not work with your TV, try the following:
  - Set the USB connection settings on your camera to “Mass Storage”.
  - Copy the files from the camera to a USB flash drive, then connect the drive to the TV.
- Some photos and movies may be magnified, resulting in low picture quality. Depending on the size and aspect ratio, images may not be displayed in full screen.
- It may take a long time to display a photo, depending on the file or settings.
- In no event shall Sony be liable for recording failure or any damage or loss of recorded contents caused or associated with the TV’s malfunction, the USB device’s malfunction, or any other problem.

Related topics

- Supported files and formats

[48] Using the TV with Other Devices | USB devices

Supported files and formats

Photos
Music
Videos
Audio sampling rates (for videos)
External subtitles

[49] Using the TV with Other Devices | USB devices | Supported files and formats

Photos

Use case : USB / Home Network

File Format	Extension
JPEG	*.jpg / *.jpe / *.jpeg

Other supported files and formats

- Music
- Videos
- Audio sampling rates (for videos)
- External subtitles

[50] Using the TV with Other Devices | USB devices | Supported files and formats

Music

Use case : USB / Home Network

mp4

Extension	Description	Sampling Rate
*.mp4 / *.m4a	AAC-LC	16k / 22.05k / 24k / 32k / 44.1k / 48k
	HE-AAC v1 / v2	24k / 32k / 44.1k / 48k

3gpp

Extension	Description	Sampling Rate
*.3gp / *.3g2	AAC-LC	16k / 22.05k / 24k / 32k / 44.1k / 48k
	HE-AAC v1 / v2	24k / 32k / 44.1k / 48k

Asf

Extension	Description	Sampling Rate

Extension	Description	Sampling Rate
*.wma	WMA9 Standard	8k / 11.025k / 16k / 22.05k / 32k / 44.1k / 48k

Other

Extension	Description	Sampling Rate
-	LPCM *1	32k / 44.1k / 48k
*.mp3	MP1L1 / MP1L2 / MP1L3 / MP2L1 / MP2L2	
	MP2L3	16k / 22.05k / 24k
	MP2.5L3	8k / 11.025k / 12k
*.wav	WAV *2	32k / 44.1k / 48k / 88.2k / 96k / 176.4k / 192k
*.flac	FLAC	16k / 22.05k / 32k / 44.1k / 48k / 88.2k / 96k / 176.4k / 192k

*1 The use case of LPCM is Home Network only.

*2 The use case of WAV is 2ch only.

Other supported files and formats

- Photos
- Videos
- Audio sampling rates (for videos)
- External subtitles

---

[51] Using the TV with Other Devices | USB devices | Supported files and formats

Videos

Use case : USB / Home Network

MPEG1 (*.mpg / *.mpe / *.mpeg)

Subtitle Type : External

Video Codec (Profile@Level)	Audio Codec	Max. / Min. Resolution	Max. Frame Rate
MPEG1	MPEG1L2	1920x1080 / QCIF (176x144)	1920x1080@30fps / 1280x720@60fps

MPEG2PS (*.mpg / *.mpe / *.mpeg)

Subtitle Type : External

Video Codec (Profile@Level)	Audio Codec	Max. / Min. Resolution	Max. Frame Rate
MPEG2 MP@HL, MP@H14L, MP@ML	MPEG1L1 / MPEG1L2 / LPCM / AC3	1920x1080 / QCIF (176x144)	1920x1080@30fps / 1280x720@60fps

MPEG2TS

Extension : *.m2t

Subtitle Type : -

Video Codec (Profile@Level)	Audio Codec	Max. / Min. Resolution	Max. Frame Rate
MPEG2 MP@HL, MP@H14L, MP@ML	MPEG1L1 / MPEG1L2 / AAC-LC / HE-AAC v1 / HE-AAC v2 / AC3 / E-AC3	1920x1080 / QCIF (176x144)	1920x1080@30fps / 1280x720@60fps

Extension : *.m2ts / *.mts

Subtitle Type : -

Video Codec (Profile@Level)	Audio Codec	Max. / Min. Resolution	Max. Frame Rate
AVC / H.264 BP@L3, MP@L4.2, HP@L4.2	MPEG1L1 / MPEG1L2 / AAC-LC / HE-AAC v1 / HE-AAC v2 / AC3 / E-AC3	1920x1080 / QCIF (176x144)	1920x1080@60fps

MP4 (*.mp4): For 2K models

Subtitle Type : External

Video Codec (Profile@Level)	Audio Codec	Max. / Min. Resolution	Max. Frame Rate
AVC / H.264 BP@L3, MP@L4.2, HP@L4.2	AAC-LC / HE-AAC v1 / HE-AAC v2 / AC3 / E-AC3 / MPEG1L1 / MPEG1L2	1920x1080 / QCIF (176x144)	1920x1080@120fps
MPEG4 SP@L6, ASP@L5, ACEP@L4	AAC-LC / HE-AAC v1 / HE-AAC v2 / AC3 / E-AC3 / MPEG1L1 / MPEG1L2	1920x1080 / QCIF (176x144)	1920x1080@30fps / 1280x720@60fps

MP4 (*.mp4): For 4K models

Subtitle Type : External

Video Codec (Profile@Level)	Audio Codec	Max. / Min. Resolution	Max. Frame Rate

Video Codec (Profile@Level)	Audio Codec	Max. / Min. Resolution	Max. Frame Rate
AVC / H.264 BP@L3, MP@L4.2, HP@L4.2	AAC-LC / HE-AAC v1 / HE-AAC v2 / AC3 / E-AC3 / MPEG1L1 / MPEG1L2	1920x1080 / QCIF (176x144)	1920x1080@120fps
MPEG4 SP@L6, ASP@L5, ACEP@L4	AAC-LC / HE-AAC v1 / HE-AAC v2 / AC3 / E-AC3 / MPEG1L1 / MPEG1L2	1920x1080 / QCIF (176x144)	1920x1080@30fps / 1280x720@60fps
AVC / H.264 BP@L5.2, MP@L5.2, HP@L5.2 *1	AAC-LC / HE-AAC v1 / HE-AAC v2 / AC3 / E-AC3 / LPCM	3840x2160 / QCIF (176x144)	3840x2160@60p / 1920x1080@120fps
HEVC / H.265 MP@L5.1, Main10@L5.1	AAC-LC / HE-AAC v1 / HE-AAC v2 / AC3 / E-AC3	3840x2160 / QCIF (176x144)	3840x2160@60p

*1 This line includes the XAVC S format use case. The maximum supported bitrate for XAVC S is 100 Mbps.

avi (*.avi)

Subtitle Type : External

Video Codec (Profile@Level)	Audio Codec	Max. / Min. Resolution	Max. Frame Rate

Video Codec (Profile@Level)	Audio Codec	Max. / Min. Resolution	Max. Frame Rate
Xvid	MPEG1L1 / MPEG1L2 / MPEG1L3 / AC3 / E-AC3	1920x1080 / QCIF (176x144)	1920x1080@30fps / 1280x720@60fps
Motion JPEG	μ-LAW / PCM (U8) / PCM (S16LE)	1280x720 / QCIF (176x144)	1280x720@30fps

Asf (*.asf / *.wmv)

Subtitle Type : External

Video Codec (Profile@Level)	Audio Codec	Max. / Min. Resolution	Max. Frame Rate
VC1 AP@L3, MP@HL, SP@ML	WMA9 Standard	1920x1080 / QCIF (176x144)	1920x1080@30fps / 1280x720@60fps

MKV (*.mkv): For 2K models

Subtitle Type : Internal / External

Video Codec (Profile@Level)	Audio Codec	Max. / Min. Resolution	Max. Frame Rate
Xvid	DTS core / AC3 / AAC-LC / E-AC3 / HE-AAC v1 / HE-AAC v2 / MPEG1L1 / MPEG1L2 / Vorbis	1920x1080 / QCIF (176x144)	1920x1080@30fps / 1280x720@60fps
AVC / H.264	DTS core / AC3 /	1920x1080 /	1920x1080@60fps

Video Codec (Profile@Level)	Audio Codec	Max. / Min. Resolution	Max. Frame Rate
BP@L3, MP@L4.2, HP@L4.2	AAC-LC / E-AC3 / HE-AAC v1 / HE-AAC v2 / MPEG1L1 / MPEG1L2 / Vorbis	QCIF (176x144)	
MPEG4 SP@L6, ASP@L5, ACEP@L4	DTS core / AC3 / AAC-LC / E-AC3 / HE-AAC v1 / HE-AAC v2 / MPEG1L1 / MPEG1L2 / Vorbis	1920x1080 / QCIF (176x144)	1920x1080@30fps / 1280x720@60fps
VP8	DTS core / AC3 / AAC-LC / E-AC3 / HE-AAC v1 / HE-AAC v2 / MPEG1L1 / MPEG1L2 / Vorbis	1920x1080 / QCIF (176x144)	1920x1080@30fps / 1280x720@60fps

MKV (*.mkv): For 4K models

Subtitle Type : Internal / External

Video Codec (Profile@Level)	Audio Codec	Max. / Min. Resolution	Max. Frame Rate
Xvid	DTS core / AC3 / AAC-LC / E-AC3 / HE-AAC v1 / HE-AAC v2 / MPEG1L1 / MPEG1L2 / Vorbis	1920x1080 / QCIF (176x144)	1920x1080@30fps / 1280x720@60fps

Video Codec (Profile@Level)	Audio Codec	Max. / Min. Resolution	Max. Frame Rate
AVC / H.264 BP@L3, MP@L4.2, HP@L4.2	DTS core / AC3 / AAC-LC / E-AC3 / HE-AAC v1 / HE-AAC v2 / MPEG1L1 / MPEG1L2 / Vorbis	1920x1080 / QCIF (176x144)	1920x1080@60fps
MPEG4 SP@L6, ASP@L5, ACEP@L4	DTS core / AC3 / AAC-LC / E-AC3 / HE-AAC v1 / HE-AAC v2 / MPEG1L1 / MPEG1L2 / Vorbis	1920x1080 / QCIF (176x144)	1920x1080@30fps / 1280x720@60fps
VP8	DTS core / AC3 / AAC-LC / E-AC3 / HE-AAC v1 / HE-AAC v2 / MPEG1L1 / MPEG1L2 / Vorbis	1920x1080 / QCIF (176x144)	1920x1080@30fps / 1280x720@60fps
AVC / H.264 BP@L5.2, MP@L5.2, HP@L5.2	DTS core / AC3 / AAC-LC / E-AC3 / HE-AAC v1 / HE-AAC v2	3840x2160 / QCIF (176x144)	3840x2160@60p
HEVC / H.265 MP@L5.1, Main10@L5.1	DTS core / AC3 / AAC-LC / E-AC3 / HE-AAC v1 / HE-AAC v2	3840x2160 / QCIF (176x144)	3840x2160@60p

3gpp (*.3gp / *.3g2)

Subtitle Type : External

Video Codec (Profile@Level)	Audio Codec	Max. / Min. Resolution	Max. Frame Rate
MPEG4 SP@L6, ASP@L5, ACEP@L4	AAC-LC / HE-AAC v1 / HE-AAC v2 / AC3 / E-AC3 / MPEG1L1 / MPEG1L2	1920x1080 / QCIF (176x144)	1920x1080@30fps / 1280x720@60fps
AVC / H.264 BP@L3, MP@L4.2, HP@L4.2	AAC-LC / HE-AAC v1 / HE-AAC v2 / AC3 / E-AC3 / MPEG1L1 / MPEG1L2	1920x1080 / QCIF (176x144)	1920x1080@60fps

MOV (*.mov)

Subtitle Type : External

Video Codec (Profile@Level)	Audio Codec	Max. / Min. Resolution	Max. Frame Rate
AVC / H.264 BP@L3, MP@L4.2, HP@L4.2	AAC-LC / HE-AAC v1 / HE-AAC v2 / AC3 / E-AC3 / MPEG1L1 / MPEG1L2 / μ-LAW / PCM (U8) / PCM (S16BE) / PCM (S16LE)	1920x1080 / QCIF (176x144)	1920x1080@60fps
MPEG4 SP@L6, ASP@L5, ACEP@L4	AAC-LC / HE-AAC v1 / HE-AAC v2 / AC3 / E-AC3 / MPEG1L1 /	1920x1080 / QCIF (176x144)	1920x1080@30fps / 1280x720@60fps

Video Codec (Profile@Level)	Audio Codec	Max. / Min. Resolution	Max. Frame Rate
	MPEG1L2 / μ-LAW / PCM (U8) / PCM (S16BE) / PCM (S16LE)		
Motion JPEG	AAC-LC / HE-AAC v1 / HE-AAC v2 / AC3 / E-AC3 / MPEG1L1 / MPEG1L2 / μ-LAW / PCM (U8) / PCM (S16BE) / PCM (S16LE)	1280x720 / QCIF (176x144)	1280x720@30fps

WebM (*.webm)

Subtitle Type : Internal / External

Video Codec (Profile@Level)	Audio Codec	Max. / Min. Resolution	Max. Frame Rate
VP8	Vorbis	1920x1080 / QCIF (176x144)	1920x1080@30fps / 1280x720@60fps

Other supported files and formats

- Photos
- Music
- Audio sampling rates (for videos)
- External subtitles

---

[52] Using the TV with Other Devices | USB devices | Supported files and formats

Audio sampling rates (for videos)

Audio Codec	Sampling Rate
LPCM	44.1k / 48k
MPEG1L1 / MPEG1L2	32k / 44.1k / 48k
MPEG1L3	
AAC-LC	16k / 22.05k / 24k / 32k / 44.1k / 48k
HE-AAC v1 / v2	24k / 32k / 44.1k / 48k
AC3	32k / 44.1k / 48k
E-AC3	
Vorbis	8k / 11.025k / 16k / 22.05k / 32k / 44.1k / 48k
WMA9	
DTS core	32k / 44.1k / 48k
μ-LAW	8k
PCM (U8)	8k
PCM (S16LE)	11.025k / 16k / 44.1k
PCM (S16BE)	

Other supported files and formats

- Photos
- Music
- Videos
- External subtitles

[53] Using the TV with Other Devices | USB devices | Supported files and formats

External subtitles

Use case : USB

File Format	Extension
SubStation Alpha	*.ass / *.ssa
SubRip	*.srt
MicroDVD	*.sub / *.txt
SubViewer	*.sub
SAMI	*.smi

Other supported files and formats

- Photos
- Music
- Videos
- Audio sampling rates (for videos)

[54] Using the TV with Other Devices

Blu-ray and DVD players

Connecting a Blu-ray or DVD player
Watching Blu-ray and DVD discs

[55] Using the TV with Other Devices | Blu-ray and DVD players

Connecting a Blu-ray or DVD player

Connect a Blu-ray/DVD player to the TV.

HDMI connection

For optimum picture quality, we recommend connecting your player to the TV using an HDMI cable. If your Blu-ray/DVD player has an HDMI jack (socket), connect it using an HDMI cable.

(A) Blu-ray/DVD player

(B) HDMI cable (not supplied)*

* Be sure to use an authorised HIGH SPEED HDMI cable bearing the HDMI logo.

Component video connection

Availability depends on your model/region/country.

If your Blu-ray/DVD player has component video jacks (sockets), connect them to the TV using a component video cable and an audio cable.

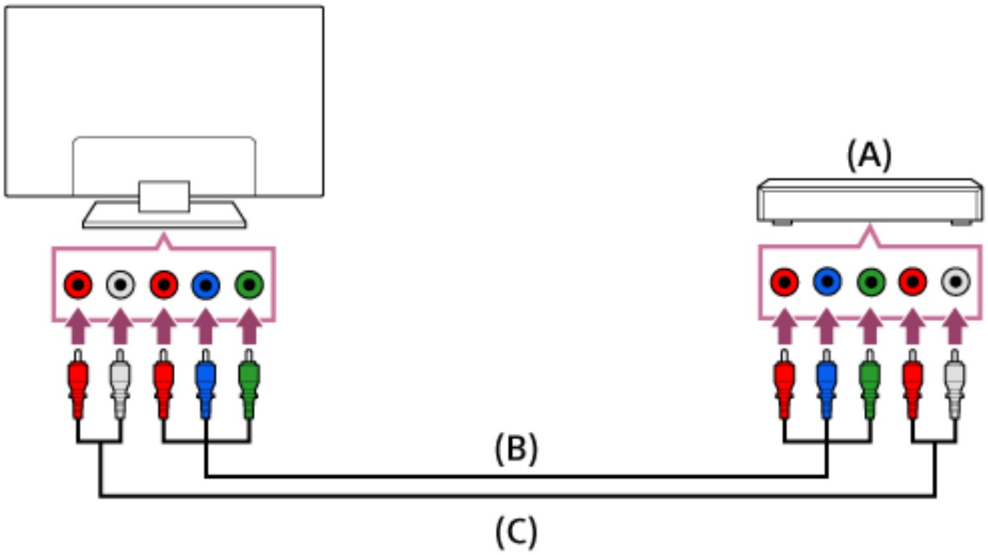

(A) Blu-ray/DVD player

(B) Component video cable (not supplied)

(C) Audio cable (not supplied)

SCART connection

Availability depends on your model/region/country.

If your Blu-ray/DVD player has a SCART jack (socket), connect it using a SCART cable.

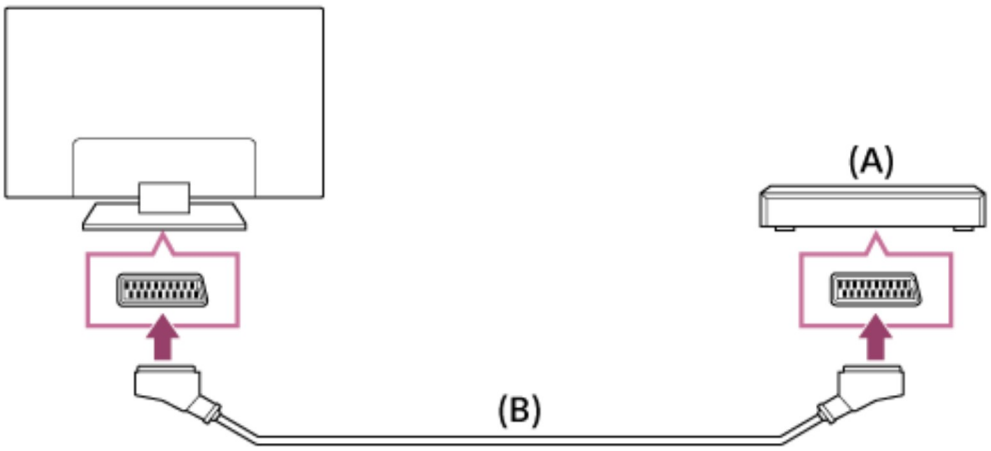

(A) Blu-ray/DVD player

(B) SCART cable (not supplied)

Note

- SCART connection may provide the same picture quality as a composite connection, depending on the connected Blu-ray/DVD player.

Composite connection

Availability depends on your model/region/country.

If your Blu-ray/DVD player has composite jacks (sockets), connect them using a composite video/audio cable.

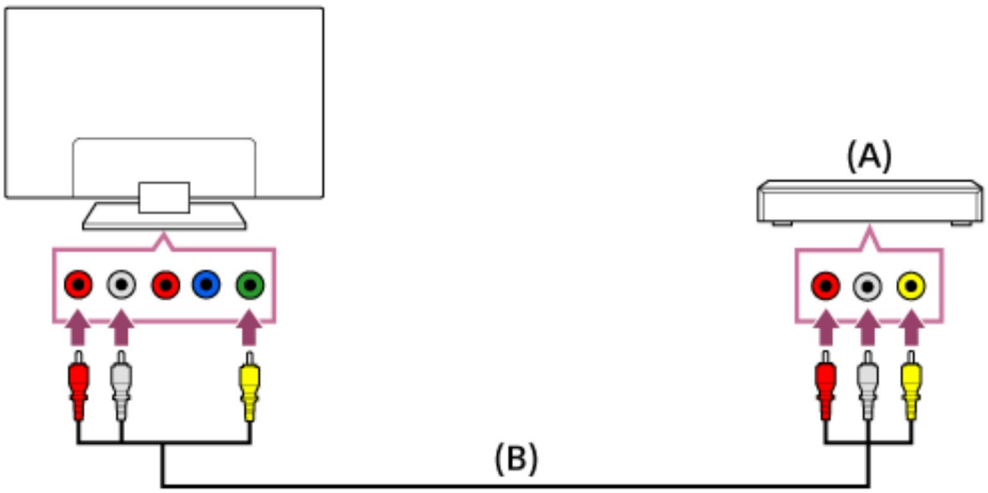

(A) Blu-ray/DVD player

(B) Composite video/audio cable (not supplied)

If using an Analogue Extension cable

Availability depends on your model/region/country.

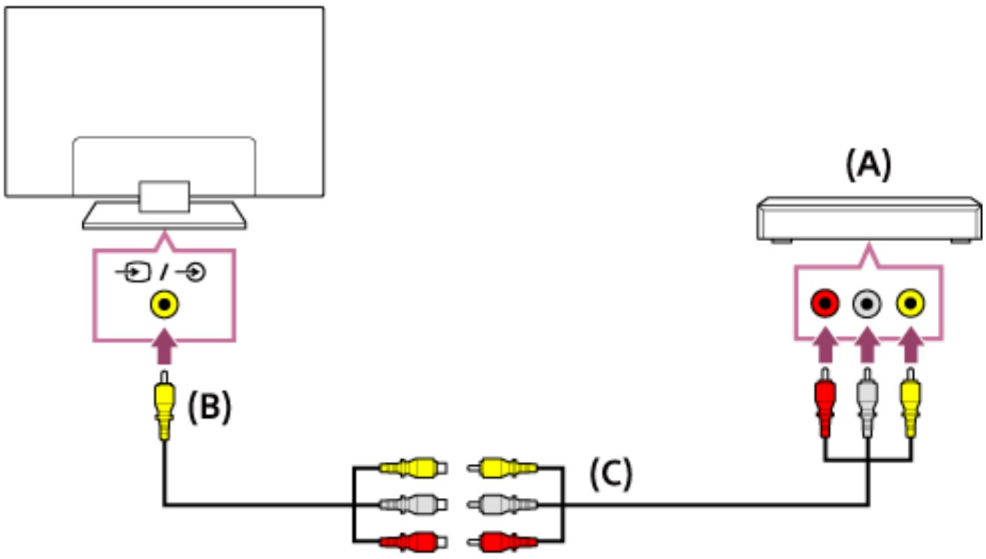

(A) Blu-ray/DVD player

(B) Analogue Extension cable (supplied)*

(C) RCA Cable (not supplied)

* Whether the Analogue Extension cable is supplied depends on your model/region /country.

Related topics

- Watching Blu-ray and DVD discs

---

[56] Using the TV with Other Devices | Blu-ray and DVD players

Watching Blu-ray and DVD discs

You can watch content from Blu-ray/DVD discs or other content supported by your player on the TV.

1. **Turn on the connected Blu-ray/DVD player.**
2. **Press the button repeatedly to select the connected Blu-ray/DVD player.**
3. **Start playback on the connected Blu-ray/DVD player.**

Hint

- If you connect a BRAVIA Sync-compatible device with HDMI connection, you can operate it by simply using the TV's remote control.

Related topics

- Connecting a Blu-ray or DVD player
- BRAVIA Sync-compatible devices

---

[57] Using the TV with Other Devices

Set-top box (cable/satellite box) with an IR Blaster (IR Blaster compatible models only)

Connecting an IR Blaster (IR Blaster compatible models only)
Setting up the IR Blaster to control the set-top box (cable/satellite box) (IR Blaster compatible models only)

---

[58] Using the TV with Other Devices | Set-top box (cable/satellite box) with an IR Blaster (IR Blaster compatible models only)

Connecting an IR Blaster (IR Blaster compatible models only)

IR Blaster compatible models have [IR Blaster setup] in [Settings] — [External inputs].

The IR Blaster allows you to operate a set-top box (cable/satellite box) that is connected to the TV, with the TV's remote control.

(IR Blaster compatible models may not be available depending on your model/country.)

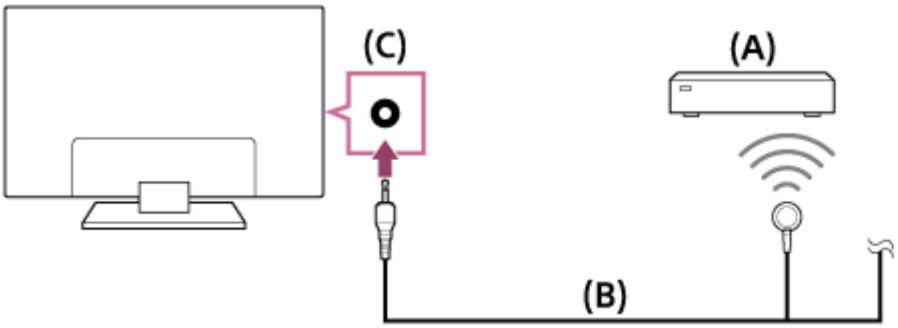

(A) Set-top box (cable/satellite box)

(B) IR Blaster cable

(C) IR Blaster jack (socket)

Note

- Make sure that the IR Blaster is correctly set up and the IR transmitter is located near the IR receiver of the external device.
- Make sure that your TV supports the external device.

Related topics

- An external device (such as a set-top box or AV receiver) cannot be controlled via the IR Blaster. (IR Blaster compatible models only)

---

[59] Using the TV with Other Devices | Set-top box (cable/satellite box) with an IR Blaster (IR Blaster compatible models only)

Setting up the IR Blaster to control the set-top box (cable/satellite box) (IR Blaster compatible models only)

Peforming [Set-top box control setup] in [IR Blaster setup] allows you to operate a cable/satellite box from the menu displayed by pressing the ACTION MENU button on the remote control. If the remote control also has the EXT.BOX MENU button, you can press it to use the remote control for cable/satellite box operations such as displaying the cable/satellite box menu.

1 **Press the HOME button, then select [Settings] — [External inputs] — [IR**

Blaster setup] — [Set-top box control setup].

2 **Follow the on-screen instructions.**

Hint

- The IR Blaster can operate an AV receiver. To set up an AV receiver, press the HOME button, then select [Settings] — [External inputs] — [IR Blaster setup] — [AV receiver control setup].
- If the AV receiver is a BRAVIA Sync-compatible device, an IR Blaster is not needed.

Note

- Some external devices may not respond to some items in the “Action Menu”.
- If you press and hold a button on the remote control, the operation may not be transmitted. Instead, press the button repeatedly.

Related topics

- Connecting an IR Blaster (IR Blaster compatible models only)
- An external device (such as a set-top box or AV receiver) cannot be controlled via the IR Blaster. (IR Blaster compatible models only)

---

[60] Using the TV with Other Devices

Smartphones and tablets

Displaying the screen of a smartphone/tablet on the TV using the Screen mirroring function

---

[61] Using the TV with Other Devices | Smartphones and tablets

Displaying the screen of a smartphone/tablet on the TV using the Screen mirroring function

---

You can display the screen of a mobile device on the TV to view photos, videos or

websites.

The “Screen mirroring” feature uses Miracast technology to display the screen of a compatible device on the TV. A wireless router is not necessary to use this function.

(A) Smartphone
(B) Tablet
(C) Computer

1 **Press the button, then select [Screen mirroring].**

2 **Operate your Screen mirroring compatible device to connect to the TV.**
When the device is connected to the TV, the screen displayed on the device will also be displayed on the TV.
For details, refer to the instruction manual of your device.

Note

- While the standby screen for the Screen mirroring is displayed, the wireless connection between the TV and your wireless router is disconnected, therefore communication via the Internet is stopped.

Hint

- You can configure the advanced settings of Screen mirroring by pressing the HOME button, then selecting [Settings] — [Network] — [Wi-Fi Direct] — [Advanced settings].

Related topics

- Using Wi-Fi Direct to connect to the TV (no wireless router required)

- Connected devices
- What kind of devices can be connected using the Screen mirroring function?
- Enjoying content from your mobile device on the TV with Google Cast

[62] Using the TV with Other Devices

Computers, cameras, and camcorders

Connecting a computer and viewing stored content

Connecting a camera or camcorder and viewing stored content

Computer video signal specifications

[63] Using the TV with Other Devices | Computers, cameras, and camcorders

Connecting a computer and viewing stored content

To connect a computer

Use an HDMI cable to connect your computer to the TV.

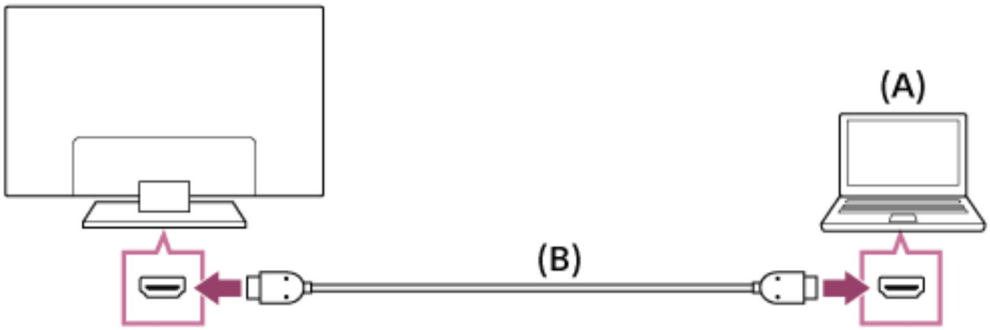

(A) Computer

(B) HDMI cable (not supplied)*

* Be sure to use an authorised HIGH SPEED HDMI cable bearing the HDMI logo.

To check the video signal specifications

- Computer video signal specifications

To view content stored on a computer

After connecting the computer, press the HOME button, then select the input the computer is connected to.

To check the supported file formats

- Supported files and formats

Note

- For optimum picture quality, we recommend that you set your computer to output video signals according to one of the settings listed in “Computer video signal specifications”.
- Depending on the connection status, the image may be blurred or smeared. In this case, change the computer’s settings and select another input signal from the “Computer video signal specifications” list.

---

[64] Using the TV with Other Devices | Computers, cameras, and camcorders

Connecting a camera or camcorder and viewing stored content

To connect a camera or camcorder

Connect your Sony digital still camera or camcorder using an HDMI cable. Use a cable that has an HDMI mini jack (socket) for the digital still camera/camcorder end, and a standard HDMI jack (socket) for the TV end.

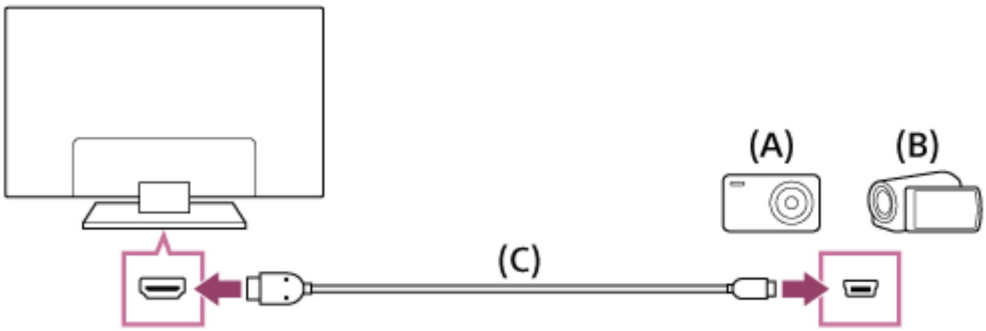

(A) Digital still camera

(B) Camcorder

(C) HDMI cable (not supplied)*

* Be sure to use an authorised HIGH SPEED HDMI cable bearing the HDMI logo.

To view content stored on a digital still camera/camcorder

1. **After connecting the digital still camera/camcorder, turn it on.**
2. **Press the button repeatedly to select the connected digital still camera/camcorder.**
3. **Start playback on the connected digital still camera/camcorder.**

To check the supported file formats

- Supported files and formats

Hint

- If you connect a BRAVIA Sync-compatible device, you can operate it by simply using the TV's remote control. Make sure that the device is BRAVIA Sync-compatible. Some devices may not be compatible with BRAVIA Sync even though they have an HDMI jack (socket).

Related topics

- BRAVIA Sync-compatible devices

[65] Using the TV with Other Devices | Computers, cameras, and camcorders

Computer video signal specifications

(Resolution, Horizontal frequency/Vertical frequency)

- 640 x 480, 31.5 kHz/60 Hz
- 800 x 600, 37.9 kHz/60 Hz
- 1024 x 768, 48.4 kHz/60 Hz
- 1152 x 864, 67.5 kHz/75 Hz (2K Full HD models or 4K models only)
- 1280 x 1024, 64.0 kHz/60 Hz (2K Full HD models or 4K models only)
- 1600 x 900, 56.0 kHz/60 Hz (2K Full HD models or 4K models only)

- 1680 x 1050, 65.3 kHz/60 Hz (2K Full HD models or 4K models only)
- 1920 x 1080, 67.5 kHz/60 Hz (2K Full HD models or 4K models only)*

* 1080p timing, when applied to the HDMI input, will be treated as video timing and not computer timing. This will affect the [Screen] settings in [Display]. To view computer content, set [Wide mode] to [Full], and [Display area] to [Full pixel](2K models) or [+1](4K models). ([Display area] is configurable only when [Auto display area] is disabled.)

Other video input signals

The following video formats can be displayed depending on specifications of your computer.

- 480p, 480i
- 576p*1, 576i*1
- 720/24p
- 720p/30Hz, 720p/50Hz*1, 720p/60Hz
- 1080i/50Hz*1, 1080i/60Hz
- 1080/24p
- 1080p/30Hz, 1080p/50Hz*1, 1080p/60Hz
- 3840 x 2160p/24Hz, 3840 x 2160p/25Hz*1, 3840 x 2160p/30Hz (4K models only)
- 3840 x 2160p/50Hz*1*3, 3840 x 2160p/60Hz*3 (4K models only)
- 4096 x 2160p/24Hz*2 (4K models only)
- 4096 x 2160p/50Hz*1*2*3, 4096 x 2160p/60Hz*2*3 (4K models only)

*1 Not supported depending on your region/country.

*2 When 4096 x 2160p is input and [Wide mode] is set to [Normal], the resolution is displayed as 3840 x 2160p.
To display 4096 x 2160p, set [Wide mode] setting to [Full 1] or [Full 2].

*3 Supported only by HDMI 2/3 depending on your model.

Note

- 1920 x 1080/60 Hz output may not be available, depending on your computer. Even if 1920 x 1080/60 Hz output is selected, the actual output signal may differ. In this case, change the computer’s settings, then set your computer to use a different video signal.

[66] Using the TV with Other Devices

Audio system

Connecting an audio system
Adjusting audio system-related settings

[67] Using the TV with Other Devices | Audio system

Connecting an audio system

See the illustrations below to connect an audio system such as an AV receiver or sound bar. After finishing the connection, configure the audio settings to play TV sound through the audio system (refer to the related topic link at the bottom of this page).

To connect an ARC capable audio system using an HDMI cable

If your audio system features HDMI output jacks (sockets), you can connect the TV to your audio system using an HDMI cable.

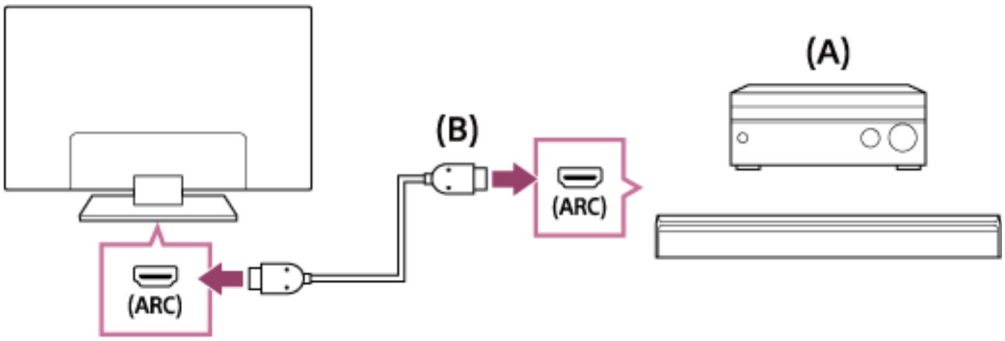

(A) AV receiver or sound bar
(B) HDMI cable (not supplied)*

* Be sure to use an authorised HIGH SPEED HDMI cable bearing the HDMI logo.

Hint

- When connecting a BRAVIA Sync-compatible digital audio system with Audio Return Channel (ARC) technology, connect it to the HDMI IN jack (socket) labelled with the “ARC” mark with an HDMI cable. However, if connecting a system that is not BRAVIA Sync-compatible or Audio Return Channel capable, you must also connect

the TV to the audio system using the DIGITAL AUDIO OUT (OPTICAL) jack (socket).

- See the instruction manual of the audio system for details on connecting other devices and for set-up. If the audio system is not compatible with Dolby Digital or DTS, set [Settings] — [Sound] — [Digital audio out] to [PCM].

Note

- The location of the HDMI port that supports ARC varies depending on your model. Refer to the Reference Guide.

To connect an audio system that is not ARC capable using an optical audio cable

You can connect the TV's audio output to an audio system using an optical audio cable.

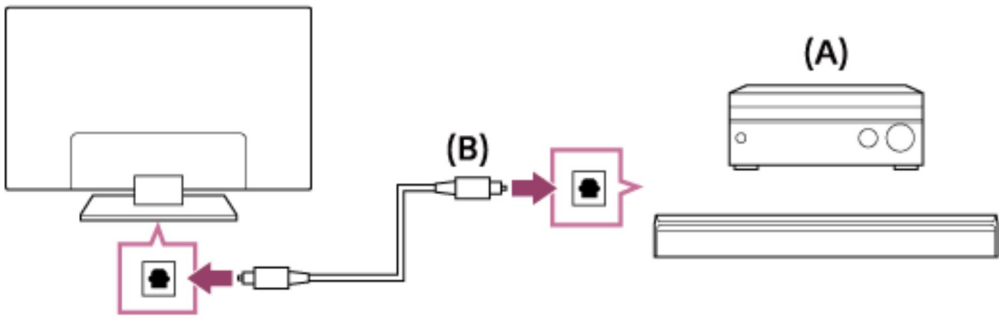

(A) AV receiver or Sound bar

(B) Optical audio cable (not supplied)

Hint

- See the instruction manual of the audio system for details on connecting other devices and for set-up. If the audio system is not compatible with Dolby Digital or DTS, set [Settings] — [Sound] — [Digital audio out] to [PCM].

To connect an audio system using an audio cable

You can connect the TV's audio output to an audio system using a stereo to RCA analogue audio cable.

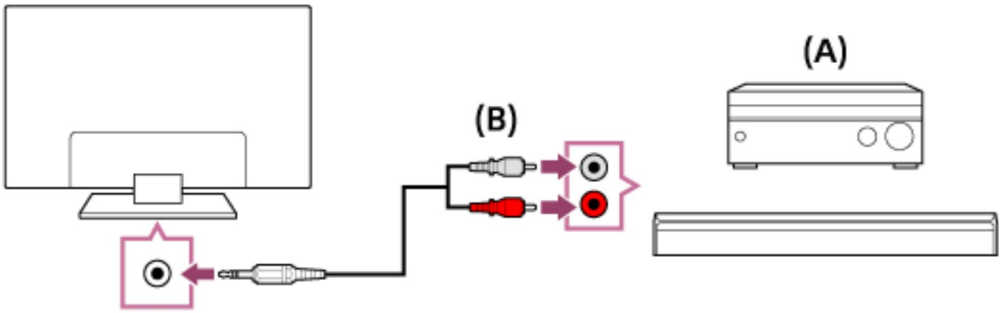

(A) AV receiver or Sound bar

(B) Audio cable (not supplied)

Hint

- See the instruction manual of the audio system for details on connecting other devices and for the set-up. If the audio system is not compatible with Dolby Digital or DTS, set [Settings] — [Sound] — [Digital audio out] to [PCM].

Related topics

- Adjusting audio system-related settings

[68] Using the TV with Other Devices | Audio system

Adjusting audio system-related settings

When using the HDMI connection or optical audio connection

1. **After connecting the TV to your audio system, press the ACTION MENU button, then select [Speakers] — [Audio system].**

2. **Turn on the connected audio system, then adjust the volume.**
   If you connect a BRAVIA Sync-compatible device with an HDMI connection, you can operate it by simply using the TV's remote control.

Note

- You need to configure the [Digital audio out] settings according to your audio system.

Press the HOME button, then select [Settings] — [Sound] — [Digital audio out].

When using the audio cable connection

1 **After connecting the TV to your audio system, press the HOME button, then select [Settings] — [Sound] — [Headphone/Audio out] — [Audio out (Fixed)].**

2 **Turn on the connected audio system, then adjust the volume.**

Hint

- When using an external audio system, the audio out of the TV can be operated using the TV's remote control if [Headphone/Audio out] is set to [Audio out (Variable)]. Press the HOME button, then select [Settings] — [Sound] — [Headphone/Audio out] — [Audio out (Variable)].
- When connecting a subwoofer, press the HOME button, then select [Settings] — [Sound] — [Headphone/Audio out] — [Subwoofer].
- If a specific audio system is connected with an HDMI cable, you can adjust the output timing of the picture and sound.
  - Adjusting the AV sync setting

  For details about supported models, refer to the support site.
  - Support Site

Related topics

- Connecting an audio system
- No sound but good picture.
- No audio or low audio with a home theatre system.

---

[69] Using the TV with Other Devices

Bluetooth devices

Connecting a Bluetooth device
Adjusting the AV sync setting
Supported Bluetooth profiles

[70] Using the TV with Other Devices | Bluetooth devices

Connecting a Bluetooth device

To pair the TV with a Bluetooth device

Only for Bluetooth A2DP-supported models that can use Bluetooth audio devices such as headphones or speakers.

Bluetooth A2DP-supported models that can use Bluetooth audio devices have [A/V sync] in [Settings] — [Sound].

1. **Turn the Bluetooth device on and put it in pairing mode.**
   To put your Bluetooth device in pairing mode, refer to the instruction manual of the device.

2. **Press the HOME button, then select [Settings] — [Bluetooth settings] — [Add device] to put the TV in pairing mode.**
   A list of available Bluetooth devices will be displayed.

3. **Select the desired device from the list, then follow the on-screen instructions.**
   If you are prompted to enter a passcode, refer to the instruction manual of the device.
   After pairing is completed, the device connects to the TV.

To connect to a paired Bluetooth device

1. **Press the HOME button, then select [Settings] — [Bluetooth settings].**

2 **Select a paired but unconnected device from the list.**

3 **Select [Connect].**

Related topics

- Supported Bluetooth profiles
- Operation cuts out, or a device does not work.

[71] Using the TV with Other Devices | Bluetooth devices

Adjusting the AV sync setting

If a Bluetooth audio device is connected, there may be a delay between the picture and sound due to the properties of Bluetooth. You can adjust the delay between the picture and sound with the A/V sync setting. (Only for Bluetooth A2DP-supported models that can use Bluetooth audio devices.)

Bluetooth A2DP-supported models that can use Bluetooth audio devices have [A/V sync] in [Settings] — [Sound].

1 **Press the HOME button, then select [Settings] — [Sound] — [A/V sync] — the desired option.**

Hint

- You can also adjust the output timing of the picture and sound if a specific audio system is connected with an HDMI cable. For details about supported models, refer to the support site.
  - Support Site

Note

- Depending on the connected Bluetooth audio device, the picture and sound may not match even when the [A/V sync] setting is set to [On] or [Auto].
- To prevent the TV from displaying a black screen immediately after turning it on when a sound bar is connected wirelessly (Bluetooth), set the [A/V sync] setting to [On].

- If [Picture mode] is set to one of the options below, the output timing of the picture and sound is not adjusted even when the [A/V sync] setting is set to [Auto].
  - [Game]
  - [Graphics]
  - [Photo-Vivid]
  - [Photo-Standard]
  - [Photo-Custom]

  To adjust [A/V sync] when in any of these modes, select [On].
- The responsiveness of the TV while playing video games may feel slower due to the [A/V sync] setting adding a delay to the output timing of the picture. For games that are dependant on response time, we recommend that you use the TV speakers or a sound bar with a wired (HDMI cable/optical digital cable) connection.

---

[72] Using the TV with Other Devices | Bluetooth devices

Supported Bluetooth profiles

The TV supports the following profiles:

- HID (Human Interface Device Profile)
- HOGP (HID over GATT Profile)
- A2DP (Advanced Audio Distribution Profile)*
- AVRCP (Audio/Video Remote Control Profile)*
- 3DSP (3D Synchronization Profile)*
- SPP (Serial Port Profile)

* Available depending on your model/region/country.

Related topics

- Connecting a Bluetooth device

---

[73] Using the TV with Other Devices

Sony wireless subwoofer (optional) (Sony wireless subwoofer supported models only)

Connecting a wireless subwoofer (optional)
Adjusting wireless subwoofer-related settings (optional)

[74] Using the TV with Other Devices | Sony wireless subwoofer (optional) (Sony wireless subwoofer supported models only)

Connecting a wireless subwoofer (optional)

You can use the optional Wireless Subwoofer SWF-BR100 to extend the bass response of the TV's sound.

The availability of this feature depends on your model/region/country.
TVs that support the Wireless Subwoofer indicate "SWF-BR100" in the specifications section of the Reference Guide.

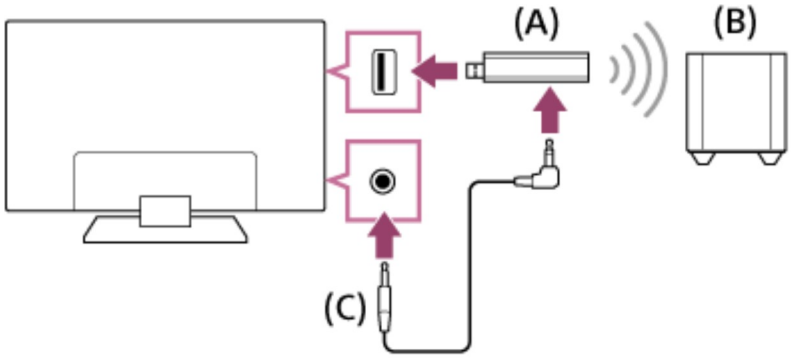

(A) Wireless Transceiver
(B) Wireless Subwoofer SWF-BR100
(C) Audio cable

1. **Connect the audio cable (supplied) to the Wireless Transceiver.**
2. **Connect the other end of the audio cable to the AUDIO OUT / 🎧 jack (socket) of the TV.**
3. **Connect the Wireless Transceiver to the USB port of the TV.**
   [Headphone/Audio out] is automatically set to [Subwoofer].
4. **Position the Wireless Subwoofer and connect it to the AC power.**
   We recommend that the Wireless Subwoofer be placed as close as possible to the TV.

Hint

- When the Wireless Transceiver is disconnected, [Headphone/Audio out] is automatically restored to its original setting.
- For details on how to set up the Wireless Subwoofer, refer to the instruction manual supplied with the Wireless Subwoofer.

Related topics

- Adjusting wireless subwoofer-related settings (optional)

---

[75] Using the TV with Other Devices | Sony wireless subwoofer (optional) (Sony wireless subwoofer supported models only)

Adjusting wireless subwoofer-related settings (optional)

Sony wireless subwoofer supported models have [Wireless Subwoofer power] in [Settings] — [Sound] — [Sound].

The sound settings of the Wireless Subwoofer have already been set to the recommended values for your TV. Follow the instructions below to change the settings to suit your preferences.

1. **Press the HOME button, then select [Settings] — [Sound] — [Sound] — [Advanced settings] — [Sound mode related] — [Wireless Subwoofer].**

Available Options

[Wireless Subwoofer level]
Adjusts the volume level of the Wireless Subwoofer.
[Cut off frequency (50-200Hz)]
Adjusts the cutoff frequency of the Wireless Subwoofer. All frequencies below the cutoff frequency are output to the Wireless Subwoofer.
[Phase]
Sets the phase polarity. Select the setting to suit your preference.
[Wireless Subwoofer sync]

Adjusts the time lag of the Wireless Subwoofer sound. If the sound produced by the Wireless Subwoofer is too late, use [+]; if it is too early, use [-].

[Reset Wireless Subwoofer settings]

Resets the Wireless Subwoofer settings to their initial values.

To set the power control method of the Wireless Subwoofer

1. **Press the HOME button, then select [Settings] — [Sound] — [Sound] — [Wireless Subwoofer power].**

Related topics

- Connecting a wireless subwoofer (optional)

---

[76] Using the TV with Other Devices

BRAVIA Sync-compatible devices

BRAVIA Sync overview
Using features available for BRAVIA Sync-compatible devices
Adjusting BRAVIA Sync settings

---

[77] Using the TV with Other Devices | BRAVIA Sync-compatible devices

BRAVIA Sync overview

If a BRAVIA Sync-compatible device (e.g., BD player, AV amplifier) is connected with an HDMI cable, you can operate the device with the TV's remote control.

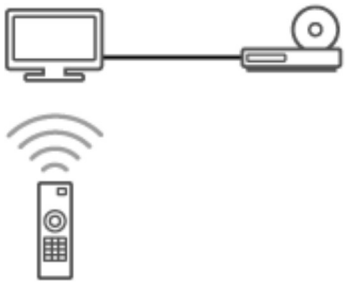

Related topics

- Using features available for BRAVIA Sync-compatible devices
- Adjusting BRAVIA Sync settings

[78] Using the TV with Other Devices | BRAVIA Sync-compatible devices

Using features available for BRAVIA Sync-compatible devices

The [Sync Menu] is primarily used to operate BRAVIA Sync-compatible devices from the TV.
Press the ACTION MENU button, and select [Sync Menu].

Blu-ray/DVD player

- Automatically turns the Blu-ray/DVD player on and switches the input to the Blu-ray/DVD player when you select it from the Home Menu or Sync Menu.
- Automatically turns the TV on and switches the input to the connected Blu-ray/DVD player when the Blu-ray/DVD player starts to play.
- Automatically turns the connected Blu-ray/DVD player off when you turn the TV off.
- Controls menu operation (↑ / ↓ / ← / → buttons), playback (e.g., ► button), and channel selection of the connected Blu-ray/DVD player through the TV's remote control.

AV amplifier

- Automatically turns the connected AV amplifier on and switches the sound output from the TV speaker to the audio system when you turn the TV on. This function is only available if you have previously used the AV amplifier to output the TV's sound.
- Automatically switches the sound output to the AV amplifier by turning the AV amplifier on when the TV is turned on.
- Automatically turns the connected AV amplifier off when you turn the TV off.
- Adjusts the volume (◿ +/– buttons) and mutes the sound (🔇 button) of the connected AV amplifier through the TV's remote control.

Video camera

- Automatically turns the TV on and switches the input to the connected video camera when the camera is turned on.
- Automatically turns the connected video camera off when you turn the TV off.
- Controls menu operation (↑ / ↓ / ← / → buttons), playback (e.g., ► button) of the connected video camera through the TV's remote control.

Note

- "BRAVIA Sync control" (BRAVIA Sync) is only available for connected BRAVIA Sync-compatible devices that have the BRAVIA Sync logo.

Related topics

- BRAVIA Sync overview
- Adjusting BRAVIA Sync settings

[79] Using the TV with Other Devices | BRAVIA Sync-compatible devices

Adjusting BRAVIA Sync settings

1. **Turn on the connected device.**

2. **To enable [BRAVIA Sync control], press the HOME button, then select [Settings] — [External inputs] — [BRAVIA Sync settings] — [BRAVIA Sync control].**

3. **Activate BRAVIA Sync on the connected device.**
   When a specific Sony BRAVIA Sync-compatible device is connected and powered on and [BRAVIA Sync control] is enabled, BRAVIA Sync is automatically activated on that device. For details, refer to the instruction manual of the connected device.

Available options

Available options are shown below. (Options vary depending on your model/region /country.)

[Auto devices off]

If disabled, the connected device does not turn off automatically when the TV is turned off.

[Auto TV on]

If disabled, the TV does not turn on automatically when the connected device is turned on.

[BRAVIA Sync device list]

Displays the BRAVIA Sync device list.

[Device control keys]

Allows you to set buttons to control an HDMI connected device.

To use the Sync Menu

1 **Press the SYNC MENU button, then select the desired item in the Sync Menu.**

Hint

- If you press the SYNC MENU button, the promotion screen is displayed in the following situations:
  - An HDMI device is not connected.
  - [BRAVIA Sync control] is disabled.

Related topics

- BRAVIA Sync overview
- Using features available for BRAVIA Sync-compatible devices

---

[80] Using the TV with Other Devices

Viewing pictures in 4K from compatible devices (4K models only)

Viewing pictures in 4K resolution (4K models only)
Settings for viewing pictures in 4K resolution with higher quality (4K models only)

---

[81] Using the TV with Other Devices | Viewing pictures in 4K from compatible devices (4K models only)

Viewing pictures in 4K resolution (4K models only)

A picture with a 4K or higher resolution can be displayed in 4K resolution (3840×2160). You can connect a digital still camera/camcorder that supports HDMI 4K output to HDMI IN of the TV to display high resolution photos stored on the camera. You can also display high resolution photos stored in connected USB devices or your home network.

The availability of this function depends on your region/country.

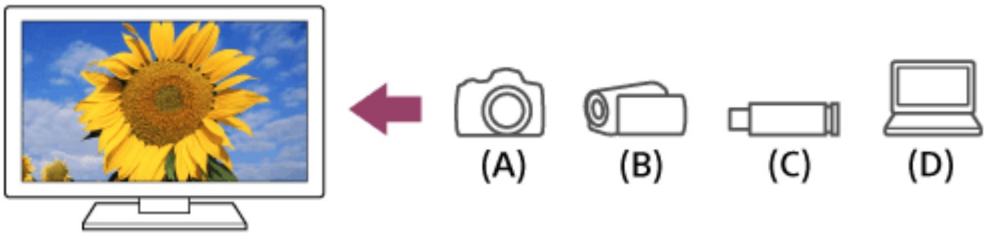

(A) Digital still camera
(B) Camcorder
(C) USB device
(D) Network device

To view pictures stored on a USB device or network device in 4K resolution

1. **Connect the USB device or network device to the TV.**
2. **Press the HOME button, then select [Album] — the USB device, server, or preset folder containing the file to play — the folder or file from the list.**
   If you select a folder, select the file.

To view pictures stored on a digital still camera/camcorder

1. **Connect a digital still camera or camcorder that supports HDMI output to the HDMI IN jack (socket) of the TV, using an HDMI cable.**
2. **Press the button repeatedly to select the connected device.**
3. **Set the connected device to 4K output.**
4. **Start playback on the connected device.**

To check the supported file formats

- Supported files and formats

To view pictures in 4K resolution with higher quality

You can set the HDMI signal format to [Enhanced format] to view pictures in 4K resolution with higher quality.

For information about Enhanced format or changing the settings, refer to the Settings for viewing pictures in 4K resolution with higher quality (4K models only) page.

Note

- A 3D picture cannot be displayed.
- If you change the picture by pressing the ← / → buttons, it may take time to display.

Related topics

- Computers, cameras, and camcorders
- USB devices
- Connecting to a Network

---

[82] Using the TV with Other Devices | Viewing pictures in 4K from compatible devices (4K models only)

Settings for viewing pictures in 4K resolution with higher quality (4K models only)

When you display the High-Quality 4K format with the HDMI input, set [HDMI signal format] in [External inputs].

HDMI signal format

To change the HDMI signal format setting, press the HOME button, then select [Settings] — [External inputs] — [HDMI signal format].

Standard format

Standard HDMI format[*1] for normal use.

Enhanced format

High-Quality HDMI format[*1][*2]. Set only when using capable devices.

[*1] HDR included (HDR models only). HDR models have [HDR mode] in [Settings] — [Display] — [Picture] — [Advanced settings] — [Video options].
[*2] 4K 60p 4:2:0 10bit, 4:4:4:, 4:2:2 etc.

Note

- When using [Enhanced format], picture and sound may not be output correctly. In this case, connect the device to an HDMI IN that is in [Standard format], or change the HDMI signal format of HDMI IN to [Standard format].
- Set to [Enhanced format] only when using compatible devices.
- When you watch 4K picture with High-Quality, use a Premium High Speed HDMI Cable(s) that supports speeds of 18 Gbps. For details on a Premium High Speed HDMI Cable(s) that supports 18 Gbps, refer to the cable specifications.
- In some models, the HDMI signal format of HDMI IN 2 and 3 changes at the same time.

Related topics

- Viewing pictures in 4K resolution (4K models only)

[83]

Connecting to a Network

Connecting to a network using a LAN cable
Connecting to a network using a wireless connection
Home network features

[84] Connecting to a Network

Connecting to a network using a LAN cable

Connecting to a network using a LAN cable

A wired LAN connection allows you to access the Internet and your home network.

Make sure to connect to the Internet or home network via a router.

Hint

- If you are using a modem with router functions, you do not need to prepare a separate router. Ask your service provider for information about your modem's specifications.

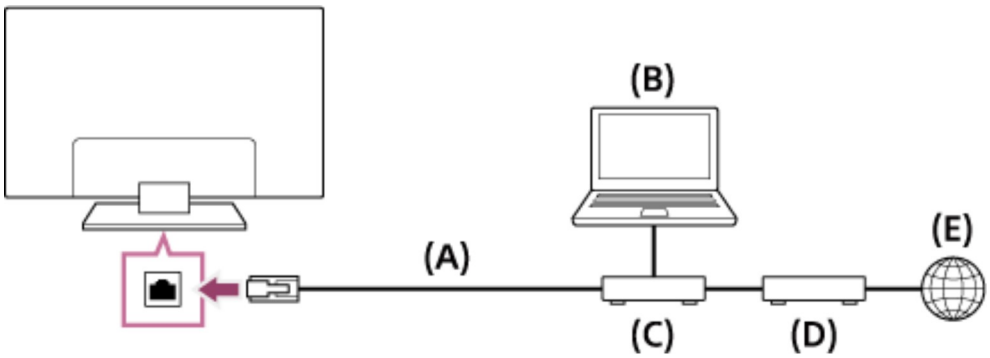

(A) LAN cable
(B) Computer
(C) Router
(D) Modem
(E) Internet

1 **Set up your LAN router.**
For details, refer to the instruction manual of your LAN router, or contact the person who set up the network (network administrator).

2 **Press the HOME button, then select [Settings] — [Network] — [Network setup] — [Easy].**

3 **Follow the on-screen instructions to complete the set-up.**

Note

- The network-related settings that are required may vary depending on the Internet service provider or router. For details, refer to the instruction manuals provided by the Internet service provider or those supplied with the router. You can also contact

the person who set up the network (network administrator).

[85] Connecting to a Network

Connecting to a network using a wireless connection

Using Wi-Fi to connect the TV to your network
Using Wi-Fi Direct to connect to the TV (no wireless router required)

[86] Connecting to a Network | Connecting to a network using a wireless connection

Using Wi-Fi to connect the TV to your network

The built-in wireless LAN device allows you to access the Internet and enjoy the benefits of networking in a cable-free environment.

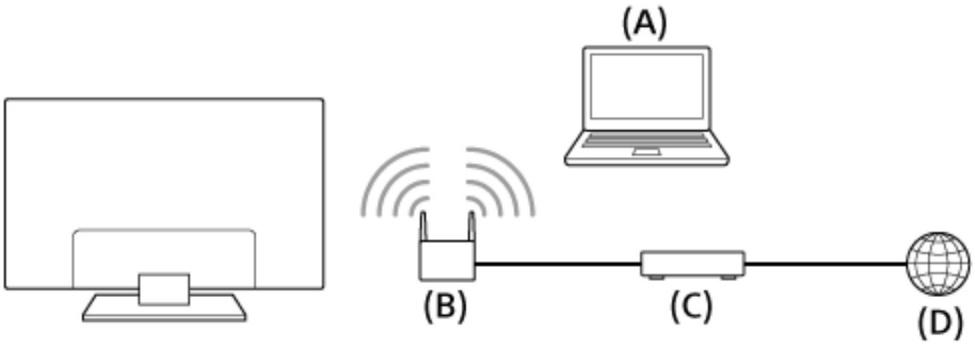

(A) Computer
(B) Wireless router
(C) Modem
(D) Internet

1 **Set up your wireless router.**
For details, refer to the instruction manual of your wireless router, or contact the person who set up the network (network administrator).

2 **Press the HOME button, then select [Settings] — [Network] — [Network setup] — [Easy].**

3 Follow the on-screen instructions to complete the set-up.

To turn off the built-in wireless LAN

To disable [Built-in Wi-Fi], press the HOME button, then select [Settings] — [Network] — [Advanced settings] — [Built-in Wi-Fi].

Hint

- For smooth video streaming:
  - Change the setting of your wireless router to a high-speed networking standard such as 802.11n if possible.
    For details on how to change the setting, refer to the instruction manual of your wireless router, or contact the person who set up the network (network administrator).
  - If the above procedure does not deliver any improvement, change the setting of your wireless router to 5GHz, which may help improve the video streaming quality.
  - The 5GHz band may not be supported depending on your region/country. If the 5GHz band is not supported, the TV can only connect to a wireless router using the 2.4GHz band.
- To use WEP security with a wireless router, select [Settings] — [Network] — [Network setup] — [Easy] — [Wi-Fi] — [Connect by scan list].

Note

- The network-related settings that are required may vary depending on the Internet service provider or router. For details, refer to the instruction manuals provided by the Internet service provider or those supplied with the router. You can also contact the person who set up the network (network administrator).
- If you select the [Show password] option in the password entry screen, the exposed password may be seen by other individuals.

Related topics

- Network (Internet/home)/apps

---

[87] Connecting to a Network | Connecting to a network using a wireless connection

Using Wi-Fi Direct to connect to the TV (no

wireless router required)

You can connect a device to the TV wirelessly, without using a wireless router, and then stream videos, photos, and music that is stored on your device directly to the TV.

1. **To enable [Wi-Fi Direct], press the HOME button, then select [Settings] — [Network] — [Wi-Fi Direct] — [Wi-Fi Direct].**
2. **Select [Wi-Fi Direct settings].**
3. **Select the TV name displayed on the TV screen with the Wi-Fi Direct device.**
   If the device does not support Wi-Fi Direct, select the [Show Network (SSID)/Password].
4. **Operate the Wi-Fi Direct/Wi-Fi device to connect with the TV.**
5. **Send content from the Wi-Fi Direct/Wi-Fi device to the TV.**
   For details, refer to the instruction manual of the device.

If the connection does not succeed

When the standby screen for the Wi-Fi Direct setting is displayed, select [Show Network (SSID)/Password] and follow the on-screen instructions to complete the set-up.

To connect another device

Follow the steps above to connect devices. Up to 10 devices can be connected at the same time. To connect another device when 10 devices are already connected,

disconnect an unnecessary device, then connect the other device.

To change the name of the TV shown on the connected device

Press the HOME button, then select [Settings] — [About] — [Device name].

To list connected devices/deregister devices

Press the HOME button, then select [Settings] — [Network] — [Wi-Fi Direct] — [Advanced settings] — [Show device list/Delete].

To deregister a device, select the device in the list to delete, then press the button. Then, select [Yes] in the confirmation display.

To deregister all devices, select [Delete all] in the list, then [Yes] in the confirmation display.

To change the band setting (for experts)

When your TV is not connected wirelessly to a router, you can select the wireless band for the Wi-Fi Direct function. Press the HOME button, then select [Settings] — [Network] — [Wi-Fi Direct] — [Advanced settings] — [Band setting].

[Auto]
Normally use this option. It automatically selects an appropriate band for the Wi-Fi Direct function.
[Auto (2.4GHz band)]
Use this option when connecting with devices that support 2.4GHz only. This option may support more devices than other options.
[Auto (5GHz band)]
Use this option when connecting with devices that support 5GHz. This option may improve video streaming quality.

Note that when you select this option, the TV cannot connect with devices that support 2.4GHz only.

[Manual]
Use this option to select a specific wireless channel.

Hint

- For information about the supported wireless band of your device, refer to the instruction manual of your device.
- The 5GHz band may not be supported depending on your region/country. If the 5GHz band is not supported, you can only use [Auto] and [Manual].

Note

- If the TV is connected to a wireless router at 5GHz:
  - The 5GHz wireless connection will be disconnected when [Wi-Fi Direct settings] is selected. While the connection is disconnected, communication via Internet is stopped.
  - The connection will resume automatically after exiting from [Wi-Fi Direct settings].
- The 5GHz band may not be supported depending on your region/country.

Related topics

- The TV cannot be found by a Wi-Fi Direct device.

---

[88] Connecting to a Network

Home network features

Adjusting home network settings
Playing content from a computer
Playing content from a media server

---

[89] Connecting to a Network | Home network features

Adjusting home network settings

You can adjust the following home network settings.

To check the server connection

Press the HOME button, then select [Settings] — [Network] — [Home network setup] — [Server diagnostics] — follow the on-screen instructions to perform diagnostics.

To use the renderer function

Press the HOME button, then select [Settings] — [Network] — [Home network setup] — [Renderer] — the desired option.

[Renderer function]

Enable the renderer function.

You can play photo/music/video files in a controller (e.g., digital still camera) on the TV screen by operating the device directly.

[Renderer access control]

- Select [Automatic access permission] to access the TV automatically when a controller accesses the TV for the first time.
- Select [Custom settings] to change the access permission settings of each controller.

To use the remote device

Press the HOME button, then select [Settings] — [Network] — [Remote device settings] — the desired option.

[Control remotely]

Enable operation of the TV from a registered device.

[Deregister remote device]

Deregister a device to disable operation of the TV from that device.

---

[90] Connecting to a Network | Home network features

Playing content from a computer

If you connect the TV to a home network via a router, you can enjoy content (photo/music /video files) stored on a network device located in another room.

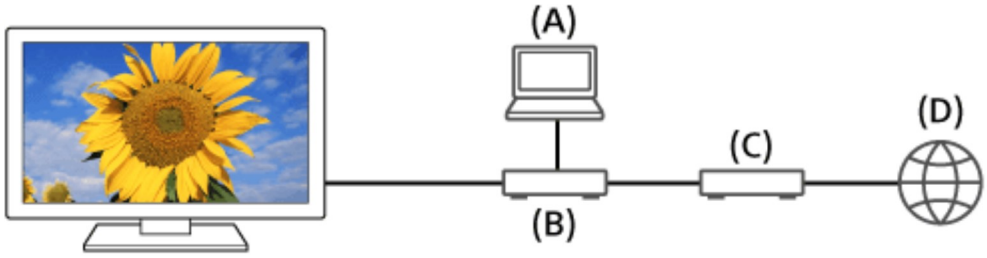

(A) Computer (Server)

(B) Router

(C) Modem

(D) Internet

1 **Connect the TV to your home network.**

2 **Press the HOME button, then select [Album], [Video], or [Music] — the server containing the file to play — the folder or file from the list.**
If you select a folder, select the desired file.
Playback starts.

To check the supported file formats

- Supported files and formats

Note

- Depending on the file, playback may not be possible even when using the supported formats.

Related topics

- Adjusting home network settings

---

[91] Connecting to a Network | Home network features

Playing content from a media server

If you connect the TV to a home network via a router, you can play photo/music/video files in a controller (e.g., digital still camera) on the TV screen by operating the controller directly. The controller should also be renderer-compatible.

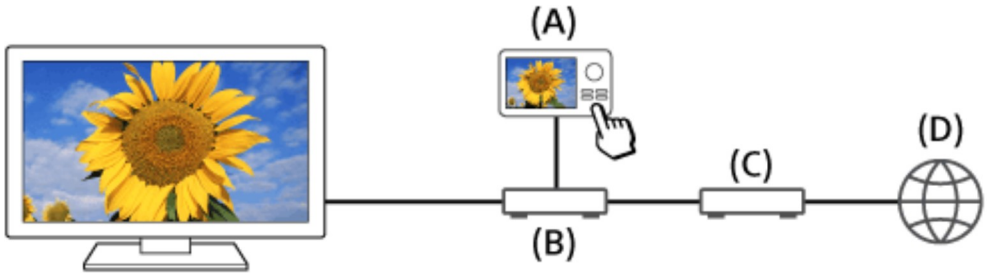

(A) Digital still camera (Controller)
(B) Router

(C) Modem

(D) Internet

1 **Connect the TV to your home network.**

2 **Operate the controller to start playing the content on the TV screen.**

Related topics

- Adjusting home network settings

[92]

Settings

Configuring the TV

Setting a timer

[93] Settings

Configuring the TV

[TV]

[Network & Accessories]

[System Preferences]

[Personal]

[Accounts]

[Expert panel settings](only models equipped with an OLED panel)

[94] Settings | Configuring the TV

[TV]

Press the HOME button, then select [Settings] — [TV] — the desired option.

Available options

[Channel setup]

Configures the settings related to receiving broadcast programming. You can also configure the settings related to receiving satellite broadcast programming.

To tune digital channels

- Receiving digital broadcasts

To tune your satellite

- Receiving satellite broadcasts (satellite compatible models only)

To sort channels or edit programme list

- Sorting channels or editing the programme list

[External inputs]

Configures the settings of the external inputs and BRAVIA Sync.

[Display]

Adjusts the picture and screen display settings such as screen brightness.

[Sound]

Adjusts the sound settings and speaker-related options.

[Illumination LED]

Customises the Illumination LED.
(The availability of this function depends on your model.)

[Power]

Changes the settings related to power consumption.

[Apps]

Changes the settings related to apps.

[Screen saver]

Configures the settings of the screen saver.

[Storage & reset]

Changes the settings related to data storage.

[Initial setup]

Sets up the basic features such as network and channels for first time use.

[About]

Displays the information about the TV.

---

[95] Settings | Configuring the TV

[Network & Accessories]

Press the HOME button, then select [Settings] — [Network & Accessories] — the desired option.

Available options

[Network]

Sets up and checks the network and server connections.

[Google Cast]

Displays information about the Google Cast feature.

[Bluetooth settings]

Setup for registering/deregistering Bluetooth devices.

[Voice Remote Control]

Setup for pairing the Voice Remote Control.

[Recording device setup] (USB HDD recording models only)

Configures the settings of USB HDD devices for recording.
(This option may not be available depending on your model/region/country.)

---

[96] Settings | Configuring the TV

[System Preferences]

Press the HOME button, then select [Settings] — [System Preferences] — the desired option.

Available options

[Date & time]

Adjusts the current time.

[Language]

Selects the menu language.

[Keyboard]

Configures the settings of the on-screen keyboard.

[Search]*

Configures the settings of the search function.

[Speech]*

Configures the settings of speech-recognition feature.

[Accessibility]

Configures the settings of accessibility features and services for helping users navigate their devices more easily.

[Retail mode settings]

Enriches the display for shop front use by setting [Demo mode], etc.

* Settings related to the search function and speech-recognition may be configured in [Google] depending on your model/region/country.

---

[97] Settings | Configuring the TV

[Personal]

Press the HOME button, then select [Settings] — [Personal] — the desired option.

Available options

[Location]

Configures the location settings to acquire the user location.

[Security & restrictions]

Configures the security settings such as passwords.

[Parental lock (Broadcast)]

Configures the parental lock settings for broadcasts and other items.

[Parental lock (Streaming channels)]

Configures the parental lock settings for streaming channels.

---

[98] Settings | Configuring the TV

[Accounts]

Press the HOME button, then select [Settings] — [Accounts] — the desired option.

[Google]

Syncs the registered Google account or removes the account.

[Add account]

Adds various service accounts such as Google accounts and Sony Entertainment Network (SEN) accounts. You can add multiple Google accounts and switch between them depending on the app.

---

[99] Settings | Configuring the TV

[Expert panel settings](only models equipped with an OLED panel)

These options are available for models equipped with an OLED panel and are used to

prevent image retention.

If the same image is displayed repeatedly or for long periods of time, image retention may occur.
The TV has two functions, [Pixel shift] and [Panel refresh], that are designed to reduce image retention.

Press the HOME button, then select [Settings] — [Display] — [Expert panel settings] — the desired option.

Available options

[Pixel shift]
Moves the displayed image at regular intervals to prevent image retention. Under normal circumstances, use the TV with this option enabled.

[Panel refresh]
Manually perform a panel refresh only when image retention is particularly noticeable.

Note

- Perform panel refresh only when image retention is particularly noticeable. As a reference, perform it only once a year. Avoid performing it more than once a year because it may affect the usable life of the panel.
- Panel refresh takes about one hour to complete. A white line may be displayed on the screen during the panel refresh. This is not a malfunction of the TV.
- Perform adjustments when the room temperature is between 10°C and 40°C . If the room temperature is outside this range, the panel refresh may not complete.

[100] Settings

Setting a timer

To set the on timer

On timer automatically turns on the TV at a specific time, such as when a programme that you want to watch comes on. It also allows you to use the TV as an alarm clock.

Press the HOME button, then select [Timers] — [On timer] — the desired option.

To set the sleep timer

Sleep timer automatically turns off the TV after a preset time.

1 **Press the HOME button, then select [Timers] — [Sleep timer] — the desired option.**

Note

- When you turn off the TV and turn it on again, [Sleep timer] is reset to [Off].

---

[101]

Troubleshooting

Start here Experiencing trouble? Start here.
Picture (quality)/screen
Keyboard
Broadcast reception
Sound
Network (Internet/home)/apps
Remote control/accessories
Power
Connected devices
USB HDD recording (USB HDD recording models only)
Illumination LED

---

[102] Troubleshooting

Start here

Self diagnostics
Software updates

If a full reset (restart) of the TV is required
Frequently Asked Questions for Troubleshooting

[103] Troubleshooting | Start here

Self diagnostics

How to check if the TV is working properly.

- Press the HOME button, then select [Self diagnostics] under [Help].

[104] Troubleshooting | Start here

Software updates

Sony will provide software updates from time to time in order to enhance functionality and provide users with the latest TV experience. The easiest way to receive software updates is via an internet connection to the TV.

To turn on automatic software download

To enable [Automatic software download], press the HOME button, then select [Help] — [System software update] — [Automatic software download].

Hint

- To update the software manually, select [Check for a system software update] in the [System software update] screen.
- If you do not wish to update the software automatically, disable [Automatic software download].

Updating software via USB storage device

If you do not have a network connection, you can also update the software by using a USB storage device. Use your computer to download the latest software from the Sony support website onto a USB storage device. Insert the USB storage device to a USB port on the TV and the software update will start automatically.

If you will update the TV software by using a USB storage device, you should read the cautions for update by USB storage device on the website.

For more about the support site, please see the Support Site page.

Related topics

- Connecting to a Network

[105] Troubleshooting | Start here

If a full reset (restart) of the TV is required

If you have trouble such as the picture not displaying on the screen or the remote control not working, try the following procedure.

Press and hold the power button on the remote control for about 5 seconds. The TV will turn off and then restart automatically after a short time.
Your personal settings and data will not be lost after the TV restarts (it is the same as unplugging the AC power cord (mains lead)).

[106] Troubleshooting | Start here

Frequently Asked Questions for Troubleshooting

For troubleshooting information, you can also refer to Frequently Asked Questions in our support site.

[107] Troubleshooting

Picture (quality)/screen

Picture quality is not as good as viewed at the store.
Distorted picture.
The screen flickers.
No colour/Dark picture/Colour is not correct/Picture is too bright.

Dark screen. How to brighten the screen.
Colour is not correct. How to adjust the colour tone.
Screen format/wide mode changes automatically.
The screen suddenly changes to a video you do not recognise while watching TV.
Suddenly the picture becomes small.
Black bands appear at the edges of the screen.
There are banners/tickers at the top or bottom of the screen.
3D pictures are not displayed. The 3D effect is weak. (3D models only)
Black bars appear on both sides of the screen when watching 3D pictures. (3D models only)
You cannot turn off 3D display while watching 3D content. (3D models only)
The message [3D signal is detected.] automatically appears when 3D signal is detected. (3D models only)
A message about an app asking for permission to access a TV function is displayed.
The screen becomes darker after a certain period of time. (only models equipped with an OLED panel)
The message [Panel refresh did not finish] is displayed. (only models equipped with an OLED panel)
You are concerned about an image retention. (only models equipped with an OLED panel)
A white line appears on the screen. (only models equipped with an OLED panel)
Panel refresh does not complete. (only models equipped with an OLED panel)

[108] Troubleshooting | Picture (quality)/screen

Picture quality is not as good as viewed at the store.

- Picture quality depends on the signal content.
- The picture quality may improve if you change it in [Display] under [Settings].

Related topics

- [TV]

[109] Troubleshooting | Picture (quality)/screen

Distorted picture.

- Check the antenna (aerial)/cable connection.
- Keep the antenna (aerial)/cable away from other connecting cables.
- When installing an optional device, leave some space between the device and the TV.
- Press the ACTION MENU button, then select [Picture] — [Advanced settings] — [Motion] — [Motionflow] — [Standard] or [Off]. (For [Motionflow] compatible models only)
  [Motionflow] compatible models have [Motionflow] in [Settings] — [Display] — [Picture] — [Advanced settings] — [Motion].
- Change the current setting of [Film mode] to another setting.
  Press the ACTION MENU button, then select [Picture] — [Advanced settings] — [Motion] — [Film mode].
- Check the [Manual programme preset] settings.
  Press the HOME button, then select [Settings] — [Channel setup] — [Analogue setup] — [Manual programme preset]
  - Set [LNA] to [Off] to improve picture reception. ([LNA] may not be available depending on the situation/region/country.)
  - Perform [AFT] in [Manual programme preset] to improve picture for analogue reception. (Availability of [Manual programme preset] and its options may vary depending on the region/country/situation.)
- Make sure that the antenna (aerial) is connected using a high quality 75-ohm coaxial cable.

Related topics

- Ghosting or double images appear.
- The screen flickers.

[110] Troubleshooting | Picture (quality)/screen

The screen flickers.

- Press the ACTION MENU button, then select [Picture] — [Advanced settings] —

[Motion] — [Motionflow] — [Standard]. (For [Motionflow] compatible models only)

[Motionflow] compatible models have [Motionflow] in [Settings] — [Display] — [Picture] — [Advanced settings] — [Motion].

Related topics

- Distorted picture.

---

[111] Troubleshooting | Picture (quality)/screen

No colour/Dark picture/Colour is not correct/Picture is too bright.

- Press the ACTION MENU button, then select [Picture] to make adjustments.
- Press the ACTION MENU button, then select [Picture] — [Advanced settings] — [Reset].
- If you set [Power saving] to [Low] or [High], the black level will be enhanced. Press the HOME button, then select [Settings] — [Power] — [Eco] — [Power saving].

Related topics

- Dark screen. How to brighten the screen.
- Colour is not correct. How to adjust the colour tone.

---

[112] Troubleshooting | Picture (quality)/screen

Dark screen. How to brighten the screen.

- Press the ACTION MENU button, select [Picture] — [Advanced settings], and adjust [Brightness] or [Contrast].
- Check the [Power saving] option setting in [Eco]. If it is [Low] or [High], the screen darkens. Select [Power] — [Eco], and set [Power saving] to [Off] to brighten the screen.

Related topics

- No colour/Dark picture/Colour is not correct/Picture is too bright.

[113] Troubleshooting | Picture (quality)/screen

Colour is not correct. How to adjust the colour tone.

- Press the ACTION MENU button, select [Picture] — [Advanced settings], and adjust [Hue] or [Colour temperature].
- To deepen the colour tone, adjust [Colour] or [Live Colour]. Press the ACTION MENU button, and then select [Picture] — [Advanced settings].

Related topics

- No colour/Dark picture/Colour is not correct/Picture is too bright.

[114] Troubleshooting | Picture (quality)/screen

Screen format/wide mode changes automatically.

- When changing the channel or video input, if [Auto wide] in [Screen] is enabled, the current [Wide mode] setting is automatically changed according to the input signal. To lock the [Wide mode] setting, disable [Auto wide].

Related topics

- Suddenly the picture becomes small.

[115] Troubleshooting | Picture (quality)/screen

The screen suddenly changes to a video you do not recognise while watching TV.

In this case, the TV might be in demo mode. Try exiting demo mode.

- Press the ACTION MENU button on the remote control and select [Suspend Demo].

Then, press the HOME button on the remote control and select [Settings] — [Retail mode settings]. Disable [Demo mode] and [Picture reset mode].

[116] Troubleshooting | Picture (quality)/screen

Suddenly the picture becomes small.

- The picture becomes smaller during commercials due to the method used by the provider to broadcast content. When HD content channels switch to SD content (commercials), the picture may become small with a black border.
- [Auto wide] in [Screen] will not expand the picture while the content switches since the content information is regulated by the channel signal provider. You can manually change the [Wide mode] setting if desired, which will remain in effect until you change the channel/input or manually change the [Wide mode] setting again.

Related topics

- Screen format/wide mode changes automatically.

[117] Troubleshooting | Picture (quality)/screen

Black bands appear at the edges of the screen.

- Some wide screen programmes are filmed in aspect ratios that are greater than 16:9 (this is especially common with theatrical releases). Your TV will show these programmes with black bands at the top and bottom of the screen. For more details, check the documentation that came with your DVD (or contact your programme provider).
- Programmes in 4:3 aspect ratio will have bands on the left and right sides of the screen.
- Programmes broadcasted in HD formats (720p and 1080i) with 4:3 content will commonly have black bands on the left and right sides of the screen which are added by the broadcaster.
- [Auto wide] in [Screen] will not expand the picture when the black bands on the sides of the screen are added by the broadcaster. You can manually set [Wide mode] to [Wide

zoom] or [Zoom], which will remain in effect until you change the channel/input or manually change the [Wide mode] setting again.

- Some cable and satellite set-top boxes can also control the size of the picture. If you are using a set-top box, refer to the manufacturer of the set-top box for more information.

---

[118] Troubleshooting | Picture (quality)/screen

There are banners/tickers at the top or bottom of the screen.

In this case, the TV might be in demo mode. Try exiting demo mode.

- Press the ACTION MENU button on the remote control and select [Suspend Demo]. Then, press the HOME button on the remote control and select [Settings] — [Retail mode settings]. Disable [Demo mode] and [Picture reset mode].

---

[119] Troubleshooting | Picture (quality)/screen

3D pictures are not displayed. The 3D effect is weak. (3D models only)

3D models have [3D settings] in [Settings] — [Display].

- If two pictures are displayed side-by-side, press the ACTION MENU button, then select [3D] — [3D display] — [3D (Side-by-Side)].
  If two pictures are displayed one above the other, press the ACTION MENU button, then select [3D] — [3D display] — [3D (Over-Under)].
- If the [3D display] screen appears and 3D pictures are not displayed, turn off the device that plays 3D content and turn it on again.
- Perceived 3D effect may vary from person to person.

For 4K models

- 3D signal of 4K cannot be displayed.
- For Passive 3D Glasses models, view the TV from the front on. The 3D effect may be less pronounced depending on the viewing position. Adjust the viewing angle to the

screen.

For Active 3D Glasses models

- Be sure that there are no obstacles between the TV and the Active 3D Glasses.
- Replace the battery in the Active 3D Glasses.
- Be sure that the Active 3D Glasses are powered on.
- It is necessary to register your Active 3D Glasses to the TV before use. To use the glasses with another TV, it is necessary to re-register. Turn off the glasses before re-registering.
- Wireless devices or microwave ovens may affect the communication between the 3D Glasses and the TV as the TV uses the 2.4GHz band. In this case, try to register again.
- If a device that is not 3D-compatible (such as a home theatre system) is connected between the TV and a 3D-compatible device, the TV will not display 3D pictures. Connect the 3D-compatible device directly to the TV via an authorised HIGH SPEED HDMI cable bearing the HDMI logo.

Related topics

- Understanding the basics of 3D TV (3D models only)

---

[120] Troubleshooting | Picture (quality)/screen

Black bars appear on both sides of the screen when watching 3D pictures. (3D models only)

3D models have [3D settings] in [Settings] — [Display].

- Black bars appear on both sides of the screen in order to process 3D signals when adjusting the depth of 3D pictures in [Settings] — [Display] — [3D settings] — [3D depth adjustment].

---

[121] Troubleshooting | Picture (quality)/screen

You cannot turn off 3D display while watching 3D content. (3D models only)

3D models have [3D settings] in [Settings] — [Display].

- For 3D content displayed with the 3D signal, 3D display cannot be turned off on your TV. Turn 3D settings off on the connected device (such as a Blu-ray player).

---

[122] Troubleshooting | Picture (quality)/screen

The message [3D signal is detected.] automatically appears when 3D signal is detected. (3D models only)

3D models have [3D settings] in [Settings] — [Display].

- Deactivate the [3D signal notification] setting. Press the HOME button, then select [Settings] — [Display] — [3D settings] — [3D signal notification] — [Off].

---

[123] Troubleshooting | Picture (quality)/screen

A message about an app asking for permission to access a TV function is displayed.

- Select whether to allow or deny the app access to the displayed function.
- You can check the list of app permissions categorized by TV function and change permission settings for each app. Press the HOME button, select [Settings] — [Apps] — [App permissions] — the desired TV function.

---

[124] Troubleshooting | Picture (quality)/screen

The screen becomes darker after a certain period of time. (only models equipped with an OLED panel)

- If the whole image or part of the image remains still, the screen will gradually become darker to reduce image retention. This is a feature to protect the panel, and is not a malfunction.

---

[125] Troubleshooting | Picture (quality)/screen

The message [Panel refresh did not finish] is displayed. (only models equipped with an OLED panel)

Panel refresh automatically runs after the TV has been used for a long period of time to reduce image retention. If the TV is turned on, the AC power cord (mains lead) is unplugged, or the ambient temperature falls outside of the range between 10°C and 40°C during the panel refresh, the process will not complete and this message will appear.

- If panel refresh started automatically, it will restart when you turn off the TV with the remote control.
- If panel refresh was initiated manually, you must select it again.

[126] Troubleshooting | Picture (quality)/screen

You are concerned about an image retention. (only models equipped with an OLED panel)

If the same image is displayed repeatedly or for long periods of time, image retention may occur.

To reduce image retention, we recommend that you turn off the TV normally by pressing the power button on the remote control or TV.

Note

- Manually perform panel refresh only when image retention is particularly noticeable. As a reference, perform it only once a year. Avoid performing it more than once a year because it may affect the usable life of the panel.
- Images that include clocks and bright colours easily cause image retention. Avoid displaying these types of images for long periods of time, otherwise image retention may occur.

Related topics

- [Expert panel settings](only models equipped with an OLED panel)

[127] Troubleshooting | Picture (quality)/screen

A white line appears on the screen. (only models equipped with an OLED panel)

- Panel refresh automatically runs after the TV has been used for a long period of time to reduce image retention. Panel refresh starts after the TV is turned off and takes about one hour to complete. A white line may be displayed on the screen during the panel refresh. This is not a malfunction of the TV.

[128] Troubleshooting | Picture (quality)/screen

Panel refresh does not complete. (only models equipped with an OLED panel)

- Panel refresh works when the room temperature is between 10°C and 40°C . If the room temperature falls outside of this range during the panel refresh, the process does not finish and a message is displayed. If the message is displayed, check the temperature of the room.

[129] Troubleshooting

Keyboard

You cannot operate the current screen after the on-screen keyboard is displayed.

- To return to operation of the screen behind the on-screen keyboard, press the BACK button on the remote control.

[130] Troubleshooting

Broadcast reception

Check these things first to troubleshoot your TV reception.
Block noise or an error message appears and you cannot watch broadcasts.
Ghosting or double images appear.
Only snow noise or a black picture appears on the screen.
There is picture or sound noise when viewing an analogue TV channel.
Some channels are blank.
Poor reception or poor picture quality with digital broadcasts.
You cannot view digital channels.
Not all analogue channels are tuned.
You cannot view satellite channels. (Satellite compatible models only)
Some digital channels are missing.
You want to tune your satellite dish.

[131] Troubleshooting | Broadcast reception

Check these things first to troubleshoot your TV reception.

- Make sure that the antenna (aerial) cable is firmly connected to the TV.
  - Make sure that the antenna (aerial) cable is not loose or disconnected.
  - Make sure that the cable or cable connector of antenna (aerial) is not damaged.

[132] Troubleshooting | Broadcast reception

Block noise or an error message appears and you cannot watch broadcasts.

- Make sure that the antenna (aerial) cable is connected to the correct ports (at the TV/connected devices/wall).
- Make sure that the cable is not old or that the inside of the connector is not short-circuited.

[133] Troubleshooting | Broadcast reception

Ghosting or double images appear.

- Check cable or antenna (aerial) connections.
- Check the antenna (aerial) location and direction.
- Press the ACTION MENU button, then select [Picture] — [Advanced settings] — [Motion] — [Motionflow] — [Standard] or [Off].
  (For [Motionflow] compatible models only)
  [Motionflow] compatible models have [Motionflow] in [Settings] — [Display] — [Picture] — [Advanced settings] — [Motion].

Related topics

- Distorted picture.
- Check these things first to troubleshoot your TV reception.

[134] Troubleshooting | Broadcast reception

Only snow noise or a black picture appears on the screen.

- Check if auto tuning is performed.
- Check if the antenna (aerial) is broken or bent.
- Check if the antenna (aerial) has reached the end of its serviceable life (3-5 years for normal use, 1-2 years at a seaside location).

Related topics

- Check these things first to troubleshoot your TV reception.

[135] Troubleshooting | Broadcast reception

There is picture or sound noise when viewing an analogue TV channel.

- Check the [Manual programme preset] settings.

  Press the HOME button, then select [Settings] — [Channel setup] — [Analogue setup] — [Manual programme preset].

  - Perform [AFT] to obtain better picture and sound reception. (Option name differs depending on your region/country.)
  - Set [Audio filter] to [Off], [Low] or [High] to improve sound for analogue reception.
  - Set [LNA] to [Off] to improve picture reception. ([LNA] may not be available depending on the situation/region/country.)
- Make sure that the antenna (aerial) is connected using a high quality 75-ohm coaxial cable.
- Keep the antenna (aerial) cable away from other connecting cables.

Related topics

- Check these things first to troubleshoot your TV reception.

[136] Troubleshooting | Broadcast reception

Some channels are blank.

- The channel is for scrambled/subscription service only. Subscribe to a pay TV service.
- The channel is used only for data (no picture or sound).
- Contact the broadcaster for transmission details.

Related topics

- Check these things first to troubleshoot your TV reception.

[137] Troubleshooting | Broadcast reception

Poor reception or poor picture quality with digital broadcasts.

- Change the position, direction and angle of the terrestrial television antenna (aerial) to maximise the antenna (aerial) signal level. Make sure that the direction of the antenna

(aerial) is not changed unintentionally (such as by wind).

- If you are using a TV signal booster, adjust its signal gain.
- If equipment (such as a TV signal distributor) is connected between the antenna (aerial) and the TV, it may affect the TV reception. Directly connect the antenna (aerial) and the TV to check if the reception is improved.
- Poor weather conditions can affect satellite broadcast systems. Wait for the weather to clear. (Satellite compatible models only)

Related topics

- Check these things first to troubleshoot your TV reception.

[138] Troubleshooting | Broadcast reception

You cannot view digital channels.

- Ask a local installer if digital transmissions are provided in your area.
- Upgrade to a higher gain antenna (aerial).

Related topics

- Check these things first to troubleshoot your TV reception.
- Some digital channels are missing.

[139] Troubleshooting | Broadcast reception

Not all analogue channels are tuned.

- Try to preset channels manually by configuring the settings. Press the HOME button, then select [Settings] — [Channel setup] — [Analogue setup] — [Manual programme preset]. (Availability of [Manual programme preset] and its options may vary depending on the region/country/situation.)

Related topics

- Some digital channels are missing.

[140] Troubleshooting | Broadcast reception

You cannot view satellite channels. (Satellite compatible models only)

Satellite compatible models have [Satellite setup] in [Settings] — [Channel setup] — [Digital setup].

- Ask a local installer if satellite services are provided in your area.
- Check your LNB device and settings.
- If your TV has both “MAIN” and “SUB” jacks (sockets), and does not set to satellite twin tuner mode with [Satellite tuner mode selection], the jack (socket) labelled “SUB” cannot be used. In this case, connect your satellite antenna (aerial) to the jack (socket) labelled “MAIN.”

Related topics

- You want to tune your satellite dish.

[141] Troubleshooting | Broadcast reception

Some digital channels are missing.

To change the tuning range (available depending on your

region/country)

Press the HOME button, then select [Settings] — [Channel setup] — [Digital setup] — [Digital tuning] — [Digital auto tuning].

[Normal]
Searches for available channels within your region/country.
[Full]
Searches for available channels regardless of region/country.

To update digital services

You can run [Digital auto tuning] after moving to a new residence, changing service providers, or to search for newly launched channels.

Configuring automatic service updates

We recommend that you set [Auto service update] to [On] to allow new digital services to be added automatically as they become available.

1. **Press the HOME button, then select [Settings] — [Channel setup] — [Digital setup] — [Technical setup] — [Auto service update] — [On].**

If it is set to [Off], you will be notified of new digital services by an on-screen message and the services will not be automatically added.

Hint

- The availability of this function depends on your region/country. If unavailable, perform [Digital auto tuning] to add new services.

Related topics

- Check these things first to troubleshoot your TV reception.
- You cannot view digital channels.

---

[142] Troubleshooting | Broadcast reception

You want to tune your satellite dish.

If you have a satellite dish installed, you can view satellite broadcasts and determine your type of installation by configuring the tuning settings.

To tune your satellite

- Receiving satellite broadcasts (satellite compatible models only)

Related topics

- Check these things first to troubleshoot your TV reception.

[143] Troubleshooting

Sound

No sound but good picture.
Audio noise.
No audio or low audio with a home theatre system.
Distorted sound.
Headphone/Bluetooth audio device volume cannot be adjusted.
You want to output sound from both the headphones/Bluetooth audio device and the TV speakers.
You are concerned about a delay between the picture and sound.

[144] Troubleshooting | Sound

No sound but good picture.

- Check the volume control.
- Press 🔇 or ◿ + button to cancel muting.
- Press the ACTION MENU button, then select [Speakers] — [TV speakers].
  If it is set to [Audio system], the TV speakers only output key tones or system sounds.

Related topics

- No audio or low audio with a home theatre system.

[145] Troubleshooting | Sound

Audio noise.

- Make sure that the antenna (aerial) is connected using a high quality 75-ohm coaxial cable.
- Keep the antenna (aerial) cable away from other connecting cables.
- To avoid TV interference, make sure to use an undamaged antenna (aerial) cable.

Related topics

- Distorted sound.

[146] Troubleshooting | Sound

No audio or low audio with a home theatre system.

- Press the ACTION MENU button, then select [Speakers] — [Audio system].
- Set [Headphone/Audio out] to [Audio out (Fixed)] in the [Sound] setting.
- If the audio system is not compatible with Dolby Digital or DTS, set [Settings] — [Sound] — [Digital audio out] to [PCM].
- If you select an analogue(RF) channel and pictures are displayed correctly, change the TV broadcast system. Press the HOME button, then select [Settings] — [Channel setup] — [Analogue setup] — [Manual programme preset] — [TV system]. (Availability of [Manual programme preset] or option name differs depending on the region/country /situation.)
- Depending on your model, if [Speakers] is set to [TV speakers] and [Hi-Res up-scaling (DSEE HX)] is set to [Auto], DIGITAL AUDIO OUT (OPTICAL) is muted.
- Set [Digital audio out volume] to Max in the [Sound] setting.
- When using HDMI input with Super Audio CD or DVD-Audio, DIGITAL AUDIO OUT (OPTICAL) may not provide an audio signal.

Related topics

- Audio noise.
- Connecting an audio system

[147] Troubleshooting | Sound

Distorted sound.

- Check the antenna (aerial)/cable connection.
- Keep the antenna (aerial)/cable away from other connecting cables.
- Keep the TV away from electrical noise sources such as cars, hair-dryers, Wi-Fi units, mobile phones, or optical devices.
- When installing an optional device, leave some space between the device and TV.
- Perform [AFT] in [Manual programme preset] to improve sound for analogue reception. (Availability of [Manual programme preset] and its options may vary depending on the region/country/situation.)
- Set [Audio filter] to [Low] or [High] to improve sound for analogue reception. ([Audio filter] may not be available depending on your region/country.)

Related topics

- Audio noise.

[148] Troubleshooting | Sound

Headphone/Bluetooth audio device volume cannot be adjusted.

- If you cannot adjust the headphone or Bluetooth audio device volume with the ◿ +/- buttons, press the ACTION MENU button and select [Headphone volume]/[Bluetooth volume].

Bluetooth A2DP-supported models that can use Bluetooth audio devices have [A/V sync] in [Settings] — [Sound].

[149] Troubleshooting | Sound

You want to output sound from both the headphones/Bluetooth audio device and the TV speakers.

The setting method varies depending on whether the TV is an A2DP-supported model.

Bluetooth A2DP-supported models that can use Bluetooth audio devices have [A/V sync] in [Settings] — [Sound].

If the TV is not an A2DP-supported model ([A/V sync] not available)

- Press the HOME button, then select [Settings] — [Sound] — [Headphone speaker link] — [Off].

Bluetooth audio devices such as Bluetooth headphones cannot be used.

If the TV is an A2DP-supported model ([A/V sync] available)

- To enable [Audio to both TV speakers & other device], press the HOME button, then select [Settings] — [Sound] — [Audio to both TV speakers & other device].

[150] Troubleshooting | Sound

You are concerned about a delay between the picture and sound.

If a Bluetooth audio device is connected

The picture and sound do not match because the sound is delayed due to the properties of Bluetooth. You can adjust the output timing of the picture and sound with the A/V sync setting.

1. **To enable [A/V sync], press the HOME button, then select [Settings] — [Sound] — [A/V sync].**

If a specific audio system is connected with an HDMI cable

You can adjust the output timing of the picture and sound. For details about supported models, refer to the support site.

- Support Site

Related topics

- Adjusting the AV sync setting
- Adjusting audio system-related settings

---

[151] Troubleshooting

Network (Internet/home)/apps

The network name (SSID) of the wireless router to which you want to connect is not displayed.
Sometimes video streaming quality is poor.
Wi-Fi connection is lost or intermittent.
Certain Internet video content displays a loss of detail.
Good picture quality but no sound on Internet video content.
Apps are inaccessible.
The TV cannot access the Internet when IPv6 is set.
Your TV cannot connect to the server.
A message appears stating that the TV cannot connect to your network.
You can connect to the Internet, but not to Google services.

---

[152] Troubleshooting | Network (Internet/home)/apps

The network name (SSID) of the wireless router to which you want to connect is not displayed.

- Reset the wireless router.
- Select [[Manual entry]] to enter a network name (SSID).

---

[153] Troubleshooting | Network (Internet/home)/apps

Sometimes video streaming quality is poor.

- Quality depends on the original video provided by the video content provider and your connection bandwidth.
- The wireless network connection quality varies depending on the distance or obstacles (e.g., wall) between the TV and the wireless router, environmental interference, and the quality of the wireless router. In this case, use a wired connection for the Internet, or try the 5GHz band.
- The 5GHz band may not be supported depending on your region/country. If the 5GHz band is not supported, the TV can only connect to a wireless router using the 2.4GHz band.

Related topics

- Connecting to a network using a LAN cable
- Using Wi-Fi to connect the TV to your network

[154] Troubleshooting | Network (Internet/home)/apps

Wi-Fi connection is lost or intermittent.

- Check the installation location of the TV and wireless router. Signal condition may be affected by the following :
  - Other wireless devices, microwaves, fluorescent lights, etc., are placed nearby.
  - There are floors or walls between the wireless router and TV.

  If the problem persists even after checking the above, try using a wired LAN connection.

Related topics

- Using Wi-Fi to connect the TV to your network

[155] Troubleshooting | Network (Internet/home)/apps

Certain Internet video content displays a loss of

detail.

- Video quality and picture size depend on broadband speed and delivery by video content providers.

Related topics

- Connecting to a network using a LAN cable
- Using Wi-Fi to connect the TV to your network
- Sometimes video streaming quality is poor.

[156] Troubleshooting | Network (Internet/home)/apps

Good picture quality but no sound on Internet video content.

- Quality depends on the original content provided by the video content provider and your connection bandwidth.
- Due to the nature of Internet video, not all videos will contain sound.

Related topics

- Connecting to a network using a LAN cable
- Using Wi-Fi to connect the TV to your network

[157] Troubleshooting | Network (Internet/home)/apps

Apps are inaccessible.

- Check that the LAN cable or AC power cord (mains lead) of the router/modem * has been connected properly.
  * Your router/modem must be set in advance to connect to the Internet. Contact your Internet service provider for router/modem settings.
- Try using apps later. The app content provider's server may be out of service.

Related topics

- Connecting to a network using a LAN cable
- Using Wi-Fi to connect the TV to your network

[158] Troubleshooting | Network (Internet/home)/apps

The TV cannot access the Internet when IPv6 is set.

- IPv6 may not be supported, in which case set IPv6 to off.
  - Press the HOME button, then select [Settings] — [Network] — [Advanced settings] — [IPv6 setup].

[159] Troubleshooting | Network (Internet/home)/apps

Your TV cannot connect to the server.

- Check the LAN cable or wireless connection to your server and your TV.
- Check if your network is properly configured on your TV.
- Check your LAN cable/wireless connection or your server. The TV may have lost connection with the server.
- Perform [Server diagnostics] to check if your media server is properly communicating with the TV. Press the HOME button, then select [Settings] — [Network] — [Home network setup] — [Server diagnostics].

Related topics

- Home network features
- A message appears stating that the TV cannot connect to your network.

[160] Troubleshooting | Network (Internet/home)/apps

A message appears stating that the TV cannot connect to your network.

- Check the current network settings and perform [Check Connection].
  Press the HOME button, then select [Settings] — [Network] — [Advanced settings] — [Network status] — [Check Connection].
  Check your network connections and/or server's instruction manual for connection information, or contact the person who set up the network (network administrator).
- Reconfigure your network settings by pressing the HOME button, then select [Settings] — [Network] — [Network setup].
- If the LAN cable is connected to an active server and the TV has acquired an IP address, check your server's connections and configurations. Press the HOME button, then select [Settings] — [Network] — [Advanced settings] — [Network status].

Related topics

- Your TV cannot connect to the server.

---

[161] Troubleshooting | Network (Internet/home)/apps

You can connect to the Internet, but not to Google services.

- The date and time settings of this TV may be incorrect. Depending on the app such as Google Play or YouTube, you may not be able to connect to Google services if the time is incorrect.
  Press the HOME button, then select [Settings] — [Date & time] — [Automatic date & time] — [Use network time] to automatically adjust the time through the network.

---

[162] Troubleshooting

Remote control/accessories

The remote control does not operate.
You cannot turn the Active 3D Glasses on. (3D models only)
The LED indicator on the Active 3D Glasses blinks. (3D models only)

---

[163] Troubleshooting | Remote control/accessories

The remote control does not operate.

- Press a button on the TV to determine if the problem is with the remote control or not.
- Check that the orientation of each battery matches the positive (+) and negative (-) symbols in the battery compartment.
- Battery power may be low. Remove the remote control cover and replace the batteries with new ones.
  - **Sliding type**

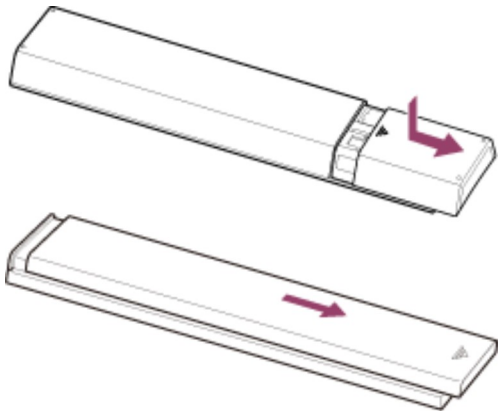

  - **Push-release type**

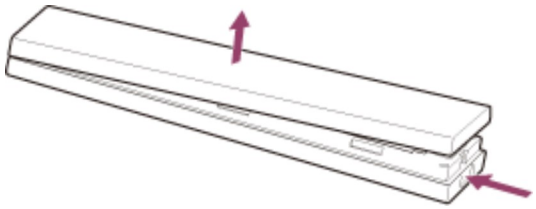

- There may be poor contact between the battery and the remote control. Remove the batteries, then insert them again.
- Point the remote control at the remote control sensor located at the front of the TV.
- Keep the remote control sensor area clear from obstacles.
- Fluorescent light can interfere with remote control operation; try turning off any fluorescent light.
- When you unplug the TV and plug it in again, the TV may not be able to turn on for a while, even if you press the power button on the remote control or the TV. This is because it takes time to initialise the system. Wait for about 10 to 20 seconds, then try again.
- When your voice is not being recognised, make sure to activate the 🎤 button on the remote control with the 🎤 button, or register the remote control with the 🎤 button to your TV. To confirm these settings, press the HOME button, then select [Settings] —

[Voice Remote Control]. The button may not be available depending on your supplied remote control.

[164] Troubleshooting | Remote control/accessories

You cannot turn the Active 3D Glasses on. (3D models only)

- Replace the battery. (Applies only to TDG-BT400A/BT500A.)

1 **Press the unlock button with the tip of a pen, etc., and take out the battery case.**

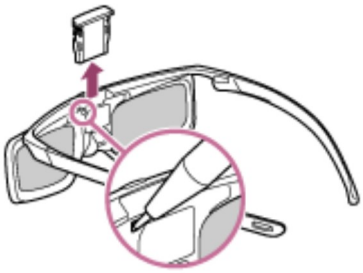

2 **Replace the battery with a new one. After that, be sure to insert the battery case until it locks in place again.**

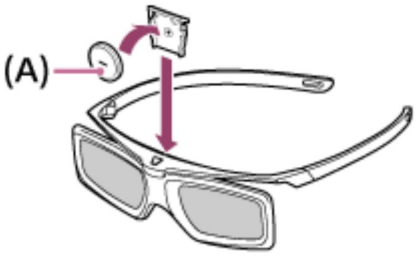

(A) CR2025 (-) side

[165] Troubleshooting | Remote control/accessories

The LED indicator on the Active 3D Glasses blinks. (3D models only)

- Lights up for 3 seconds: Indicates when turning on the glasses.

- Blinks every 2 seconds: Indicates the glasses are powered on.
- Blinks 3 times: Indicates the glasses have been powered off.
- Blinks green and yellow alternately: Indicates the glasses have started the registration process.
- Blinks 3 times every 2 seconds: Indicates the battery capacity is almost running out. Replace the battery.

Related topics

- You cannot turn the Active 3D Glasses on. (3D models only)

[166] Troubleshooting

Power

The TV turns off automatically.
The TV turns on automatically.
After turning on the TV, it turns off immediately.
After unplugging the TV and plugging it in again, the TV does not turn on even if you press the power button on the remote control or the TV.

[167] Troubleshooting | Power

The TV turns off automatically.

- The screen may have been turned off due to [Sleep timer] settings.
- Check the [Duration] setting of [On timer].
- Check if [Idle TV standby] in [Eco] is activated.
- The screen may have been turned off due to [Screen saver] settings.

Related topics

- Setting a timer

[168] Troubleshooting | Power

The TV turns on automatically.

- Check if [On timer] is activated.
- Disable the [Auto TV on] setting in [BRAVIA Sync settings].

Related topics

- BRAVIA Sync-compatible devices
- Setting a timer

[169] Troubleshooting | Power

After turning on the TV, it turns off immediately.

In this case, the TV might be in picture reset mode. When picture reset mode is enabled, the TV turns off about 10 minutes after it is turned on, and then turns on again to reduce image retention. This is not a malfunction of the TV.

Turn on the TV again using the remote control and disable picture reset mode.

- Press the HOME button on the remote control and select [Settings] — [Retail mode settings]. Disable [Picture reset mode].

[170] Troubleshooting | Power

After unplugging the TV and plugging it in again, the TV does not turn on even if you press the power button on the remote control or the TV.

- When you unplug the TV and plug it in again, the TV may not be able to turn on for a while, even if you press the power button on the remote control or the TV. This is because it takes time to initialise the system. Wait for about 10 to 20 seconds, then try

again.

[171] Troubleshooting

Connected devices

No picture from a connected device.
You cannot select a connected device in the Home Menu.
Certain programmes on digital sources display a loss of detail.
Photo images or folders take time to display.
You cannot find a connected BRAVIA Sync HDMI device.
The EXT.BOX MENU button on the remote control does not work. This feature is available for TVs in which the included remote control has an EXT.BOX MENU button.
You cannot turn off the set-top box (cable/satellite box) using the TV's remote control through the IR Blaster function.
You cannot control a second AV receiver.
An external device (such as a set-top box or AV receiver) cannot be controlled via the IR Blaster. (IR Blaster compatible models only)
Some media files in the USB device or server are not displayed.
The TV cannot be found by a Wi-Fi Direct device.
Operation cuts out, or a device does not work.
What kind of devices can be connected using the Screen mirroring function?
The TV cannot connect to a Miracast device or Screen mirroring compatible device.
Video or sound sometimes cuts out.
Some paid content cannot be played.

[172] Troubleshooting | Connected devices

No picture from a connected device.

- Turn the connected device on.
- Check the cable connection between the device and TV.
- Press the button to display the list of inputs, then select the desired input
- Correctly insert the USB device.
- Make sure that the USB device has been properly formatted.

- Operation is not guaranteed for all USB devices. Also, operations differ depending on the USB device features or the video files being played.
- If the connected device is connected to HDMI IN 2 or 3, connect it to HDMI IN 1 or 4.
- Change the HDMI signal format of the HDMI input that does not display a picture to standard format. Press the HOME button, then select [Settings] — [External inputs] — [HDMI signal format].

Related topics

- Using the TV with Other Devices

[173] Troubleshooting | Connected devices

You cannot select a connected device in the Home Menu.

- Check the cable connection.

Related topics

- Using the TV with Other Devices

[174] Troubleshooting | Connected devices

Certain programmes on digital sources display a loss of detail.

- Less detail than usual or artifacts (small blocks, dots or pixelation) may appear on the screen, due to the digital compression of the source content used by certain digital broadcasts and DVDs. The degree of visible artifacts depends on the clarity and resolution of the TV.

[175] Troubleshooting | Connected devices

Photo images or folders take time to display.

- Depending on the image dimension, file size, and number of files in a folder, some photo images or folders take time to display.
- Each time a USB device is connected to the TV, it may take up to a couple of minutes for the photos to display.

Related topics

- No picture from a connected device.

[176] Troubleshooting | Connected devices

You cannot find a connected BRAVIA Sync HDMI device.

- Check that your device is BRAVIA Sync-compatible.
- Make sure that [Control for HDMI] is set up on the BRAVIA Sync-compatible device and [BRAVIA Sync settings] — [BRAVIA Sync control] is set up on the TV.

Related topics

- BRAVIA Sync-compatible devices

[177] Troubleshooting | Connected devices

The EXT.BOX MENU button on the remote control does not work.

This feature is available for TVs in which the included remote control has an EXT.BOX MENU button.

IR Blaster compatible models have [IR Blaster setup] in [Settings] — [External inputs].

- To use the EXT.BOX MENU button, connect and set up the IR Blaster (for models supplied with an IR Blaster). Connect the IR Blaster, press the HOME button, then select [Settings] — [External inputs] — [IR Blaster setup]. (IR Blaster compatible models may not be available depending on your model/country.)

- If a BRAVIA Sync-compatible device is connected and displayed using HDMI input, some models can display the menu using the EXT.BOX MENU button, but operation is not guaranteed for all devices.

Related topics

- An external device (such as a set-top box or AV receiver) cannot be controlled via the IR Blaster. (IR Blaster compatible models only)

---

[178] Troubleshooting | Connected devices

You cannot turn off the set-top box (cable/satellite box) using the TV's remote control through the IR Blaster function.

IR Blaster compatible models have [IR Blaster setup] in [Settings] — [External inputs].

- Press the ACTION MENU button, then select [Power (STB)] in [Menu].

---

[179] Troubleshooting | Connected devices

You cannot control a second AV receiver.

- Only one BRAVIA Sync-compatible AV receiver can be used.

Related topics

- BRAVIA Sync-compatible devices

---

[180] Troubleshooting | Connected devices

An external device (such as a set-top box or AV receiver) cannot be controlled via the IR Blaster. (IR Blaster compatible models only)

IR Blaster compatible models have [IR Blaster setup] in [Settings] — [External inputs].

- Make sure that the IR Blaster is correctly set up and the IR transmitter is located near the IR receiver of the external device.
- Make sure that your TV supports the external device.
- If you press and hold a button on the remote control, the operation may not be transmitted. Instead, press the button repeatedly.
- Some external devices may not respond to some buttons on the “Action Menu”.
- The IR Blaster may not be set properly. To set the IR Blaster, press the HOME button, then select [Settings] — [External inputs] — [IR Blaster setup].

Related topics

- Connecting an IR Blaster (IR Blaster compatible models only)

---

[181] Troubleshooting | Connected devices

Some media files in the USB device or server are not displayed.

- Unsupported files may not be displayed.
- All the folders/files may not be displayed depending on the system status.

Related topics

- Supported files and formats

---

[182] Troubleshooting | Connected devices

The TV cannot be found by a Wi-Fi Direct device.

- Enable [Wi-Fi Direct]. Press the HOME button, then select [Settings] — [Network] — [Wi-Fi Direct] — [Wi-Fi Direct].
- If the TV cannot be found even though [Wi-Fi Direct] is enabled, set [Band setting] to [Auto (2.4GHz band)]. Press the HOME button, then select [Settings] — [Network] — [Wi-Fi Direct] — [Advanced settings] — [Band setting] — [Auto (2.4GHz band)].

---

[183] Troubleshooting | Connected devices

Operation cuts out, or a device does not work.

- Check if the device is turned on.
- Replace the batteries of the device.
- Re-register the device.
- Bluetooth devices use the 2.4GHz band, therefore communication speed may deteriorate or cut out occasionally due to wireless LAN interference.
  If household electric appliances (e.g., microwaves or mobile devices) are placed nearby, radio wave interference is more likely to happen.
- The TV or device may not work on a metal rack due to wireless communication interference.
- For usable communication distances between the TV and other devices, refer to the instruction manuals of the devices.
- When multiple Bluetooth devices are connected to the TV, the quality of Bluetooth communication may deteriorate.

Related topics

- Bluetooth devices

[184] Troubleshooting | Connected devices

What kind of devices can be connected using the Screen mirroring function?

- Wi-Fi enabled devices, such as smartphones and tablets, that support Miracast can be used to enjoy Screen mirroring on your BRAVIA TV. Refer to the instruction manual of your Wi-Fi device to find out if it supports Miracast. BRAVIA TV complies with the Miracast specification, but does not guarantee a successful connection with all devices.

[185] Troubleshooting | Connected devices

The TV cannot connect to a Miracast device or

Screen mirroring compatible device.

- If connecting a Miracast device (e.g., laptop) fails, press the HOME button, then select [Screen mirroring] to show the standby screen for the Screen mirroring function and try to connect again.
- If you are using Screen mirroring with another device, turn off Screen mirroring first and try again.
- If your device does not support 5GHz and you set the [Band setting] option to [Auto (5GHz band)], try changing it to [Auto].

Related topics

- Displaying the screen of a smartphone/tablet on the TV using the Screen mirroring function
- What kind of devices can be connected using the Screen mirroring function?

[186] Troubleshooting | Connected devices

Video or sound sometimes cuts out.

- Devices emitting radio waves, such as other wireless LAN devices or microwave ovens, may interfere with the Screen mirroring function using wireless LAN. Keep the TV or Sony Screen mirroring compatible devices (e.g., some models of Xperia) away from such devices, or turn them off if possible.
- Communication speed may change according to the distance or obstacles between devices, device configuration, radio wave condition, line congestion or the device you use. Communication may cut out due to the radio wave condition.

Related topics

- Displaying the screen of a smartphone/tablet on the TV using the Screen mirroring function
- Using Wi-Fi to connect the TV to your network

[187] Troubleshooting | Connected devices

Some paid content cannot be played.

- The source device needs to meet HDCP (High-bandwidth Digital Content Protection) 2.0/2.1/2.2 standards.
  Some pay contents may not be displayed via a source device which does not meet HDCP 2.0/2.1/2.2 standards.

[188] Troubleshooting

USB HDD recording (USB HDD recording models only)

You cannot use a USB HDD device. (USB HDD recording models only)
The USB HDD device cannot be registered. (USB HDD recording models only)
Recording cannot be performed./Recording failed. (USB HDD recording models only)
Recorded content disappeared. (USB HDD recording models only)
The USB HDD device operates even though it is not turned on. (USB HDD recording models only)

[189] Troubleshooting | USB HDD recording (USB HDD recording models only)

You cannot use a USB HDD device. (USB HDD recording models only)

USB HDD recording models have [Recording device setup] in [Settings].

- Check that the USB HDD device is:
  - connected properly.

    Check if it is connected to the blue USB3 port indicated as “HDD REC”.
  - turned on.
  - registered to the TV.

    To register the USB HDD device to the TV, press the HOME button, then select [Settings] — [Recording device setup] — [HDD registration].
- Connecting the USB HDD device via a USB hub is not supported.

- Perform [HDD performance check] to check that the USB HDD's specifications meet the requirements.
  Press the HOME button, then select [Settings] — [Recording device setup] — [HDD performance check].

Related topics

- Information about using a USB HDD device for recording (USB HDD recording models only)

---

[190] Troubleshooting | USB HDD recording (USB HDD recording models only)

The USB HDD device cannot be registered. (USB HDD recording models only)

- Check if the USB HDD device is connected to the USB3 port (blue) indicated as "HDD REC" .
- If the USB HDD device is properly connected to the blue USB3 port , register it for recording again because it is already registered as a device for purposes other than recording (such as storage).

Note

- If there are devices connected to the USB1 and USB2 ports, temporarily remove them for this procedure.

1. **Press the HOME button, then select [Settings] — [Storage & reset].**
2. **From [Device storage], select the USB HDD device you want to register for recording.**
3. **Select [Register for recording].**
4. **Follow the on-screen instructions to register the USB HDD device to the TV.**

- Use [HDD performance check] to check if the USB HDD device specifications meet the requirements.

To perform an [HDD performance check], press the HOME button, and then select [Settings] — [Recording device setup] — [HDD performance check].

[191] Troubleshooting | USB HDD recording (USB HDD recording models only)

Recording cannot be performed./Recording failed. (USB HDD recording models only)

USB HDD recording models have [Recording device setup] in [Settings].

- If the recording fails, the reason will be listed in [Recording Error List]. Press the HOME button, then select [Programme Guide] — [Recorded Title List] — [Recording Error List].
- Check the available space in the HDD. If very little space is left, delete unnecessary content.
- The following programmes cannot be recorded.
  - Copy-protected programmes
  - Analogue programmes
  - Programmes from external inputs (including programmes from a connected set-top box)
  - Streaming content
- Timer recording may not be possible if the broadcasting time of the programmes is changed.

Related topics

- Information about using a USB HDD device for recording (USB HDD recording models only)

[192] Troubleshooting | USB HDD recording (USB HDD recording models only)

Recorded content disappeared. (USB HDD recording models only)

- Recording cannot be performed if the AC power cord (mains lead) or connecting cables are disconnected while recording. Do not disconnect any cable while recording content. Otherwise, the content being recorded or all recorded content may be lost.

[193] Troubleshooting | USB HDD recording (USB HDD recording models only)

The USB HDD device operates even though it is not turned on. (USB HDD recording models only)

- The connected USB HDD may spin or the device's LED indicator may light up while the TV obtains EPG data during standby mode.

[194] Troubleshooting

Illumination LED

The illumination LED sometimes lights up.
You want to disable the illumination LED so that it does not light up or blink.

[195] Troubleshooting | Illumination LED

The illumination LED sometimes lights up.

The illumination LED lights up at various times such as during software updates or TV recording.

Refer to Illumination LED for details.

[196] Troubleshooting | Illumination LED

You want to disable the illumination LED so that it does not light up or blink.

You can turn it off. Press the HOME button, then select [Settings] — [Illumination LED] — [Off].

Note

- We recommend that you do not change this setting under normal circumstances because you will be unable to identify whether the TV is recording, on or off, or a timer is set.

[197]

Index

TV programmes

- DISCOVER
- GUIDE
- Interactive broadcasts
- Satellite broadcasts
- Recording
- Channel setup
- Parental lock

Picture/display

- Picture-in-picture
- 3D
- 4K pictures
- HOME
- Display
- Date & time
- Language
- Expert panel settings
- Pixel shift
- Panel refresh

Sound/voice

- Voice Search, using
- Sound
- Speech recognition

Remote control

- Remote control, using
- Voice Search
- HOME
- DISCOVER
- ACTION MENU
- Inputs
- SYNC MENU

Connections

- Google Cast
- Miracast
- Screen mirroring
- Wi-Fi Direct
- Bluetooth
- BRAVIA Sync
- Internet

External devices

- USB storage devices, recording with
- Blu-ray/DVD players, connecting
- USB memory devices, etc.
- Smartphones/tablets
- Computers
- Digital cameras, camcorders
- Audio systems
- Wireless subwoofer

Apps

- Moving to USB memory devices
- Google Play Store
- YouTube
- Netflix
- A list of recently used apps

File playback

- Computers
- Digital cameras, camcorders
- Supported files and formats

Other

- Restart
- System software update