Operating instructions

No-frost combined refrigerator-freezer

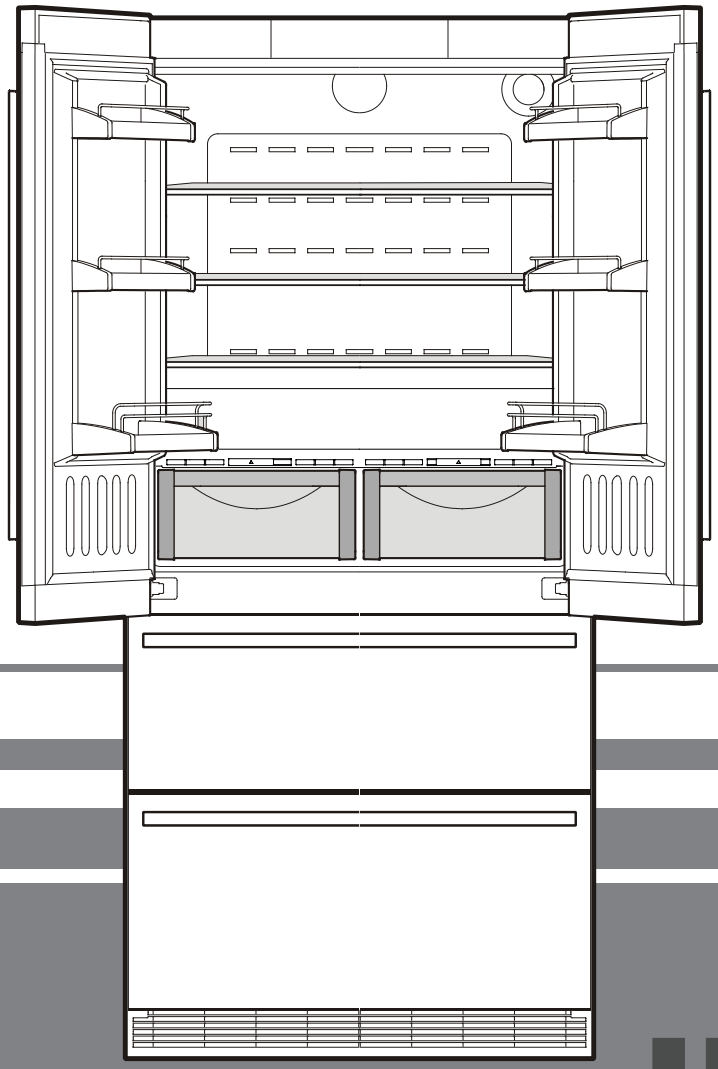

7082 499-00

CBNes 62 712

LIEBHERR

Disposal notes

The appliance contains reusable materials and should be disposed of properly - not simply with unsorted household refuse. Appliances which are no longer needed must be disposed of in a professional and appropriate way, in accordance with the current local regulations and laws.

When disposing of the appliance, ensure that the refrigerant circuit is not damaged to prevent uncontrolled escape of the refrigerant it contains (data on type plate) and oil.

- Disable the appliance.
- Pull out the mains plug.
- Cut through the connection cable.

⚠ **WARNING**
Danger of suffocation due to packing material and plastic film!
Do not allow children to play with packaging material. Take the packaging material to an official collection point.

Range of appliance use

The appliance is suitable solely for cooling food in a domestic environment or similar. This includes, for example, use

- in staff kitchenettes, bed and breakfast establishments,
- by guests in cottages, hotels, motels and other forms of accommodation,
- in catering and similar services in the wholesale trade.

Use the appliance solely as is customary within a domestic environment. All other types of use are inadmissible. The appliance is not suitable for storing and cooling medicines, blood plasma, laboratory preparations or similar substances and products covered by the 2007/47/EC Medical Devices Directive. Any misuse of the appliance may result in damage to or spoilage of stored goods. Furthermore, the appliance is not suitable for operation in potentially explosive atmospheres.

Climate rating

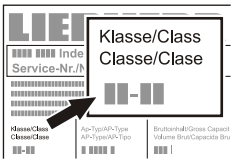

The climate rating indicates the room temperature at which the appliance may be operated in order to achieve full refrigeration performance.

The climate rating is indicated on the type plate.

The position of the type plate is shown in the section entitled **Description of the appliance**.

Climate rating	Room temperature
SN	+10°C to +32°C
N	+16°C to +32°C
ST	+16°C to +38°C
T	+16°C to +43°C
SN-ST	+10°C to +38°C
SN-T	+10°C to +43°C

Do not operate the appliance outside the specified room temperature range.

Safety instructions and warnings

- To prevent injury or damage to the unit, the appliance should be unpacked and set up by two people.
- In the event that the appliance is damaged on delivery, contact the supplier immediately before connecting to the mains.
- To guarantee safe operation, ensure that the appliance is set up and connected as described in these operating instructions.
- Disconnect the appliance from the mains if any fault occurs. Pull out the plug, switch off or remove the fuse.
- When disconnecting the appliance, pull on the plug, not on the cable.
- Any repairs and work on the appliance should only be carried out by the customer service department, as unauthorised work could prove highly dangerous for the user. The same applies to changing the mains power cable.
- Do not allow naked flames or ignition sources to enter the appliance. When transporting and cleaning the appliance ensure that the refrigerant circuit is not damaged. In the event of damage, make sure that there are no ignition sources nearby and keep the room well ventilated.
- Do not stand on the plinth, drawers or doors or use them to support anything else.
- This appliance is not intended for use by persons (including children) with reduced physical, sensory or mental capabilities or lack of experience and knowledge unless they have been given initial supervision or instruction concerning use of the appliance by a person responsible for their safety. Children should be supervised to ensure that they do not play with the appliance.
- Avoid prolonged skin contact with cold surfaces or chilled/frozen food. This could cause pain, numbness and frostbite. In the case of prolonged skin contact, protective measures should be taken, e.g. gloves should be worn.
- Do not eat ice cream, particulary ice lollies or ice cubes, immediately after taking them from the freezer compartment as there is a risk of "burning" because of the very cold temperatures.
- Do not consume food which has been stored for too long, as it could cause food poisoning.
- The appliance is designed for cooling, freezing and storage of food, and for making ice and is intended for domestic use. If used for commercial purposes, the relevant legal regulations applicable to the trade concerned must be observed.
- Do not store explosives or sprays using combustible propellants such as butane, propane, pentane etc. in the appliance. Electrical components might cause leaking gas to ignite. You may identify such sprays by the printed contents or a flame symbol.
- Do not use electrical appliances inside the appliance.
- Do not place heat-emitting appliances, e.g. microwave oven, toaster, etc., on top of the appliance.
- The appliance is designed for use in enclosed areas. Do not operate the appliance outdoors or in areas where it is exposed to splash water or damp conditions.
- Special-purpose lamps (incandescent lamps, LEDs, fluorescent tubes) in the appliance serve to illuminate the appliance interior and are not suited for room illumination.

Description of the appliance

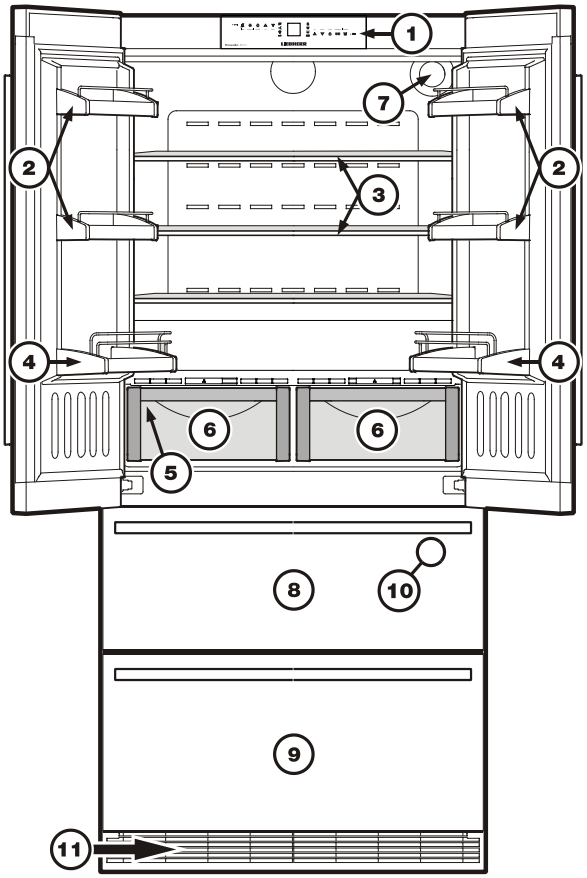

① Operating and control elements
② Adjustable door racks
③ Adjustable storage shelves
④ Bottle rack
⑤ Type plate (behind the vegetable drawer on the left-hand side)
⑥ BioFresh drawers
⑦ Water filter
⑧ Upper freezer drawer
⑨ Lower freezer drawer
⑩ IceMaker (in the interior of the upper freezer drawer)
⑪ Ventilation grille. In this area, the exchange of air for the refrigeration unit takes place. Never cover this grille or otherwise obstruct the air flow.

Temperature and control display

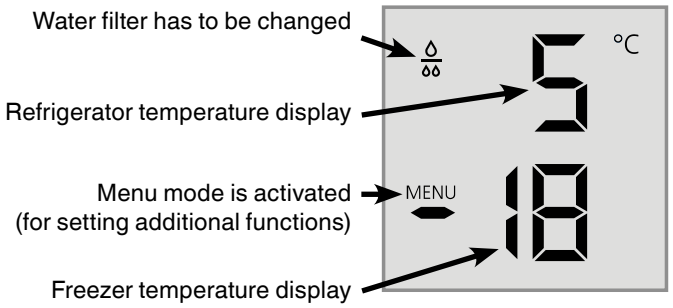

Operating and control elements

The electronic control panel has the new "**touch capacitance technology**". Any function can be activated by touching the corresponding icon.

The exact contact point is between the symbol and its label On/Off

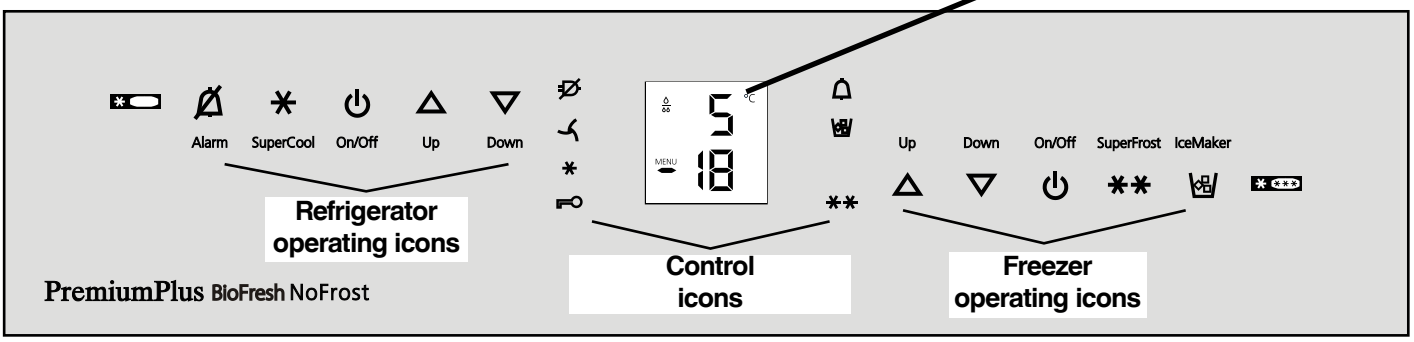

Refrigerator operating icons

- Mute alarm (refrigerator and freezer)
- SuperCool
- Refrigerator ON/OFF
- Temperature setting buttons

Appliance control icons

- Power failure LED
- Dust filter LED
  The dust filter in the appliance plinth must be cleaned.
- SuperCooling LED
- Child lock LED
- Alarm LED
- IceMaker ON LED
- SuperFrost LED

Freezer operating icons

- Temperature setting buttons
- Freezer ON/OFF
- SuperFrost
- IceMaker ON/OFF

Water filter

Before switching on the appliance, install the water filter provided in the interior rear wall of the refrigerator compartment.
This ensures good ice cube quality and keeps the water circuit free of solids such as sand.

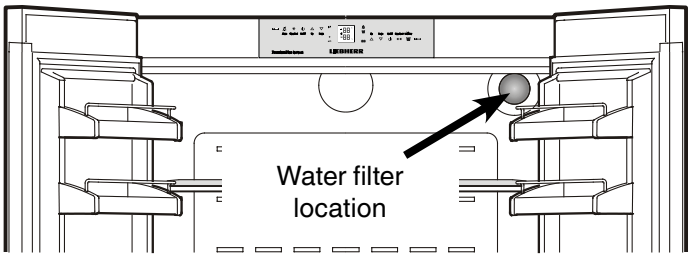

Replace the filter when the waterdrop symbol appears in the temperature display.

Filters can be obtained from your dealer.

The drop symbol must be cancelled after the filter has been changed. For detailed instructions see section entitled "**Setup mode**".

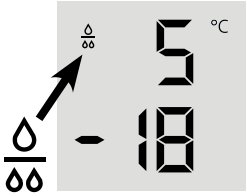

Caution!
To avoid the risk of bacteria growth, the water filter must be changed when the waterdrop symbol appears on the display!

It is not necessary to switch off the water supply when removing or installing the water filter.

Saving energy

- Always ensure good ventilation. Do not cover ventilation openings or grille.
- Always keep fan slits clear.
- Avoid positioning the appliance in direct sunlight or near cookers, radiators and similar sources of heat.
- The energy consumption depends on the installation conditions, e.g. the ambient temperature.
- Keep the time the appliance is open to a minimum.
- Store food logically.
- Keep all food properly packed and covered so as to avoid its frosting up on the outside.
- Always allow hot food to cool to room temperature before placing in the appliance.
- Defrost frozen food in the refrigerator.
- If there is a thick layer of frost in the appliance: defrost the appliance.
- Empty and switch off the refrigerator for longer vacation periods.
- Use the vacation function for longer vacation periods.

Accumulated dust increases the energy consumption:
- Once a year, dust the refrigeration unit together with the metal grid of the heat exchanger at the back of the appliance.

Installing the water filter

1. Remove the cover of the filter socket.

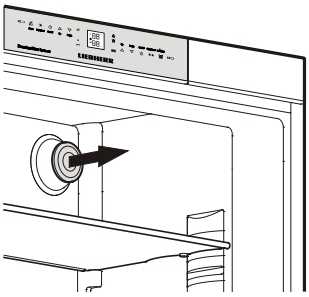

2. Insert the filter and turn it 90° clockwise.

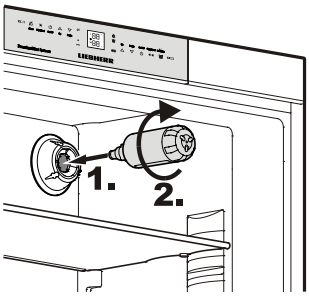

Removing the water filter

Turn the filter 90° anticlockwise and remove.

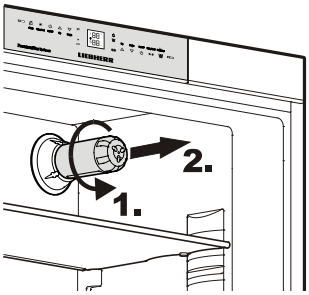

Switching the appliance on and off

You are advised to clean the appliance before switching it on for the first time (see **"Cleaning"**).
Do not load with frozen food until the temperature shows at least -18°C. The refrigerator and freezer compartments can be operated separately.

On/Off

Switching on: Touch the On/Off icons (on left for refrigerator, on right for freezer) so that the temperature displays light up or flash.

On/Off

Switching off: Keep the On/Off icons pressed for approx. 3 seconds.

Setting the temperature

The appliance is pre-set for normal operation. We recommend temperatures of +5°C in the refrigerator and -18°C in the freezer.

Up Down

To reduce the temperature: Touch the Down icon; on left for refrigerator and on right for freezer.

Up Down

To increase the temperature: Touch the Up icon.

- While you are entering the temperature, the set temperature will flash on the display.
- When you touch the temperature setting icons for the first time, the most recent setting ("reference setting") is displayed.
- You can change the settings in increments of 1°C by briefly touching the icons again. If the icons are held, the temperature setting will change faster.
- Approximately 5 seconds after the last touch, the display will automatically show the actual freezing or cooling temperature ("actual setting").
- You can change the temperatures
  in the refrigerator: between 9°C and 3°C and
  in the freezer: between -14°C and -28°C.

Temperature display

In normal operation, the following settings will be displayed:
- the average refrigerator temperature and
- the warmest frozen food temperature.

When starting up for the first time or when the appliance is warm, dashes will appear until the temperature reaches a level that can be displayed (below 0°C in the freezer).

The display will flash:

- if you change the temperature or
- if the temperature rises by several degrees, indicating cold loss, e.g. if you place fresh, "warm" food in the freezer or if you remove or re-pack frozen food the temperature may rise for a short time due to warm air flowing into the freezer.

If **F1** to **F5** appears in the display, the appliance has a fault. Consult the customer service department indicating the fault number displayed.

Audible warning signal

The appliance is equipped with an alarm function.

Audible door alarm:
If an appliance door is left open for more than 60 seconds, the audible warning signal will sound. Touch the **ALARM** icon to cancel the alarm. The alarm switches back to standby when the door is shut.

Alarm

Audible/visual temperature alarm:
It sounds when it is not cold enough in the freezer compartment. The temperature display and the LED will also flash.

The audible warning device is switched off by touching the **ALARM** icon. The temperature display will continue to flash until the cause of the alarm has been rectified.

Alarm

This can be caused by:
- the freezer door being left open for a long time, allowing warm ambient air to enter;
- a long power failure;
- a fault in the appliance.

In each case, make sure food has not thawed or perished.

Power failure/FrostControl display

If the LED comes on on the control panel, this means that the freezer temperature has risen too high during the last few hours or days due to a power failure.

If you touch the **ALARM** icon now, the highest temperature registered during the power failure will be displayed. Check the quality of the food and its suitability for consumption in case it has become too warm or even defrosted.

Alarm

The highest temperature will appear for appox. 1 minute. After that, the actual temperature in the freezer will re-appear. The display can be switched off by touching the **ALARM** icon.

Alarm

SuperCool

Touching the SuperCool icon switches the refrigerator compartment to maximum cooling. It is recommended particularly if you wish to cool large quantities of food, drinks, freshly baked goods or meals rapidly.

Switching on: Touch the SuperCool icon briefly so that the LED comes on. The refrigerator temperature will drop to its lowest value.

SuperCool

Note: The SuperCool function uses slightly more energy. After approximately six hours, however, the refrigerator switches back automatically to normal energy-saving operation. If required, the SuperCool function can be switched off sooner.

Switching off: Touch the SuperCool icon again until the LED goes out.

Setup mode

The following functions can be activated in setup mode:

c = Child lock

F = Confirm water filter change

i = Ice maker vacation state

E = Water quantity for ice cube tray

b = Set BioFresh temperature

h = Display brightness

H = Door gasket heating control

n =Confirm dust filter cleaning

Activating setup mode:

- Touch the **SuperFrost** icon for five seconds. → SuperFrost **
- The **SuperFrost LED** ** comes on for 5 seconds,
- after 5 seconds c will flash in the display.

The appliance is in setup mode now.

You can select the setup mode functions by touching the freezer compartment temperature setting icons. Up △ Down ▽

Note: In setup mode the display will flash continuously.

Exiting setup mode:

- Touch the freezer compartment **On/Off** icon → On/Off
  The appliance will change back to normal operation.

c = Child lock

The child lock is designed to protect the appliance from being switched off accidentally.

Activating the child lock

- Activate setup mode by touching the **SuperFrost** icon for 5 seconds.
- The display reads → c
- Touch the **SuperFrost** icon.
- The display reads → c1
- Touch the **SuperFrost** icon again.
- The LED is lit and the child lock is activated.
- Exit setup mode by touching the freezer compartment **On/Off** icon. On/Off

Deactivating the child lock

- Activate setup mode by touching the **SuperFrost** icon for 5 seconds.
- The display reads → c
- Touch the **SuperFrost** icon.
- The display reads → c0
- Touch the **SuperFrost** icon again.
- The LED goes out. The child lock is deactivated.
- Exit setup mode by touching the freezer compartment **On/Off** icon. On/Off

F = Confirm water filter change

After the water filter has been changed, the drop symbol on the display must be reset.

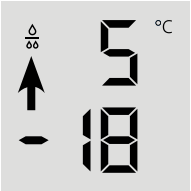

Resetting the drop symbol

- Activate setup mode by touching the **SuperFrost** icon for 5 seconds.
- Touch the freezer compartment **Down** icon until F appears in the display.
- Touch the **SuperFrost** icon.
- The display reads → F0
- Touch the **SuperFrost** icon again.
- The display reads → F
- The drop symbol disappears.
- Exit setup mode by touching the freezer compartment **On/Off** icon. On/Off

i = Ice maker vacation state

See section entitled "**Ice maker**".

E = Water quantity for ice cube tray

If the produced ice cubes of the ice maker are too small, the inflowing water quantity can be adjusted.

Adjusting the water quantity

- Activate setup mode by touching the **SuperFrost** icon for 5 seconds.
- Touch the freezer compartment **Down** icon until E appears in the display.
- Touch the **SuperFrost** icon.
- The display reads → E3
- Touch the freezer compartment **Up** icon once only so that E4 appears in the display.

Caution!
Do not increase for more than one step. If the adjusted value is too high, the ice cube tray of the ice maker could overflow.

- Touch the **SuperFrost** icon again.
- Exit setup mode by touching the freezer compartment **On/Off** icon. On/Off

Check the ice cube size within the next days. If the ice cubes are still too small, follow the steps above again.

b = Set BioFresh temperature

The temperature in the BioFresh drawers may be changed.

Setting the BioFresh temperature

- Activate setup mode by touching the **SuperFrost** icon for 5 seconds.
- Touch the freezer compartment **Down** icon until b appears in the display.
- Touch the **SuperFrost** icon.
- The display reads → b5
- Touch the freezer compartment **Up/Down** icons and set
  b6 - b9 to increase the temperature (warmer),
  b4 - b1 to reduce the temperature.

⚠ CAUTION!

For values b4 - b1, the temperature in the drawers can drop to below 0°C. Food may freeze.

- Touch the **SuperFrost** icon at the desired value.
- Exit setup mode by touching the freezer compartment **On/Off** icon. On/Off

h = Display brightness

Adjusting the display brightness

- Activate setup mode by touching the **SuperFrost** icon for 5 seconds.
- Touch the freezer compartment **Down** icon until h appears in the display.
- Touch the **SuperFrost** icon.
- The display reads → h5
- Touch the freezer compartment **Up/Down** icons to select
  h0 = minimum to
  h5 = maximum brightness.
- Touch the **SuperFrost** icon at the desired value.
- Exit setup mode by touching the freezer compartment **On/Off** icon. On/Off

H = Door gasket heating control

Condensed water on the gasket of the refrigerator doors can be eliminated by activating the door gasket heating.

Activating the door gasket heating

- Activate setup mode by touching the **SuperFrost** icon for 5 seconds
- Touch the freezer compartment **Down** icon until H appears in the display.
- Touch the **SuperFrost** icon.
- The display reads → HA
- Touch the freezer compartment **Up/Down** icons to select
  HA = at slight condensation of the gasket,
  H1 = at heavy condensation of the gasket,
  H0 = heater off.
- Touch the **SuperFrost** icon at the desired value.
- Exit setup mode by touching the freezer compartment **On/Off** icon. On/Off

n = Confirm dust filter cleaning

Once the dust filter in the appliance plinth has been cleaned, the dust filter LED in the display must be cancelled.

Cancelling the dust filter symbol

- Activate setup mode by touching the **SuperFrost** icon for 5 seconds.
- Touch the freezer compartment **Down** icon until n appears in the display.
- Touch the **SuperFrost** icon.
- The display reads → n0
- Touch the **SuperFrost** icon.
- The display reads → n
- The dust filter symbol has been cancelled.
- Exit setup mode by touching the freezer compartment **On/Off** icon. On/Off

Interior light

The interior light is located at the left, right and top in the refrigerator compartment and above each drawer in the freezer compartment. It comes on if one of the doors or a freezer drawer is opened.

Caution - class 1M laser radiation. When cover is removed, do not look directly at light through optical instruments. Severe eye injury can occur.

The light switches off automatically if one of the doors or a freezer drawer has been left open for more than 15 minutes. The audible warning signal sounds at the same time.

If one of the strip lights is not lit, it is defective.

The lighting may only be replaced by the customer service technician or by competent skilled personnel!
Do not try to change the defective lighting yourself!

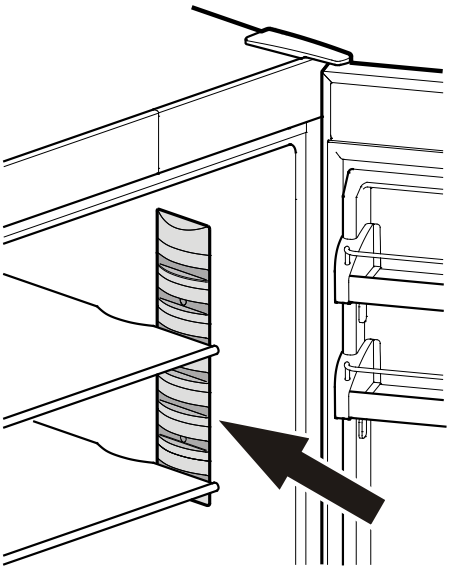

Removing the shelves

1. Follow the first three steps in the chapter above.
2. Move the shelf down and stop just over the vegetable drawer.
3. Move the front of the shelf upwards until the shelf is in a vertical position.
4. Turn the shelf by 90° and remove.

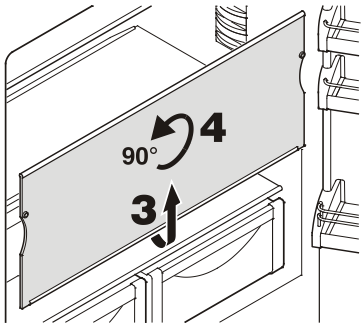

BioFresh drawer

Pull the drawer straight out, grip at the back and lift out.

Inserting the BioFresh drawer

Place the drawer on the pull-out rails. The rails must be fully extended and aligned with the front of the drawer. Slide the drawer in.

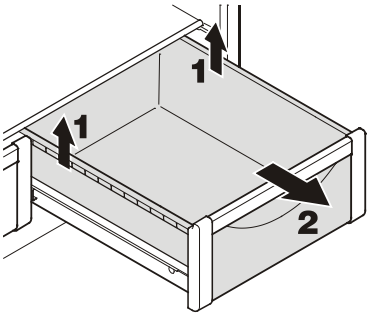

Bottle shelf

The shelf above the BioFresh drawers can be used for storing bottles horizontally.

Remove the glass plate and insert it under the shelf plate.

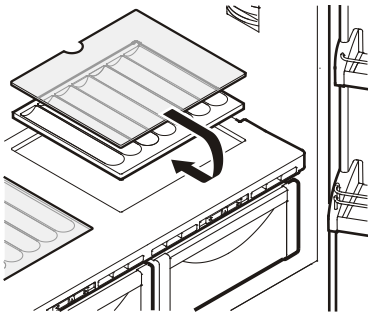

Equipment

Repositioning the door racks

Lift door rack vertically, lift out to the front and re-insert at a different height, following these steps in the reverse order.

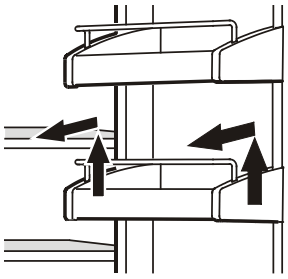

Repositioning the shelves

1. Hold the shelf underneath with your hand to prevent from tipping down backwards when removing.
2. Lift the shelf at the front.
3. Pull the shelf towards you until the round cutout of the shelf is in line with the interior light cover.
4. Lift the shelf up and replace in the desired position.

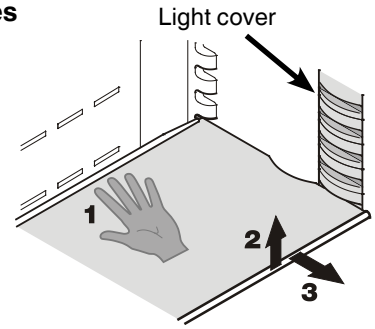

The recesses in the shelf plate ensure that the bottles are stored securely.

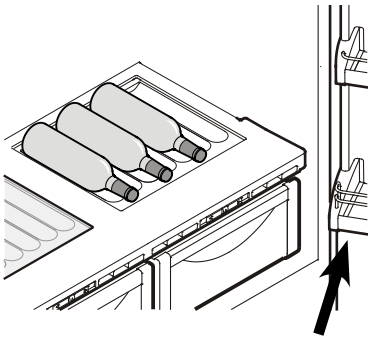

When storing tall bottles, the bottom door rack must be moved further up.

Arranging food

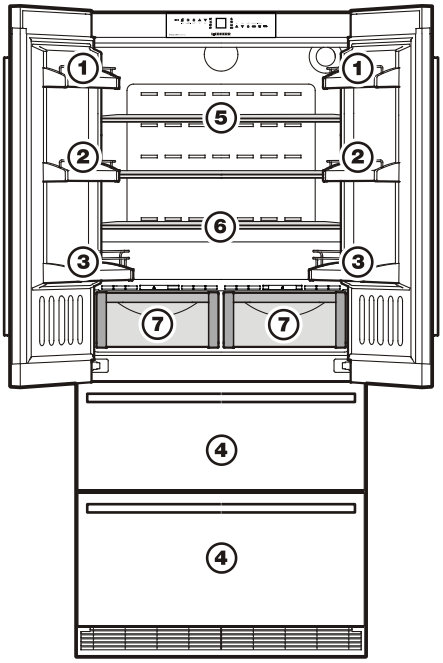

(1) butter, cheese
(2) eggs
(3) bottles
(4) frozen food, ice cubes
(5) meat, sausage products, dairy products
(6) baked goods, pre-cooked meals
(7) fruit, vegetables, salads (for high humidity setting)

meat, cold meats, dairy products (for low humidity setting)

The adjustable humidity is explained in the **BioFresh compartment** section.

Note

- Food which gives off or absorbs odours and flavours as well as liquids should always be stored covered or in closed containers.
- High-percentage alcohols should be tightly sealed and stored upright.

BioFresh compartment

The BioFresh compartment enables you to keep food for up to 3 times longer than in normal refrigerators.

The constant temperature of just above 0°C and the adjustable humidity provide the ideal storage conditions for different types of food.

The BioFresh compartment satisfies the requirements of a chill compartment to EN ISO 15502.

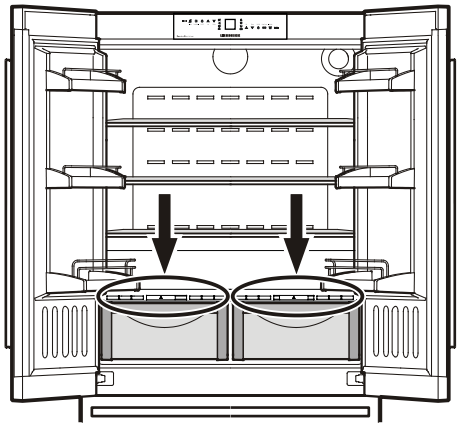

Humidity selection

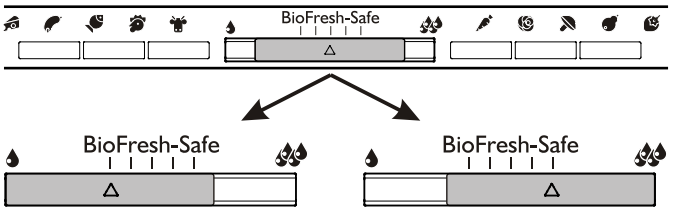

Dry
Small humidity symbol - slide control to left.

This setting is suitable for dry or wrapped food like dairy products, meat, fish, cold meats.

Humid
High relative humidity of max. 90%, large humidity symbol - slide control to right.

This setting is suitable for storing unwrapped food with a high moisture content such as salad, vegetables and fruit.

Notes

- The humidity in the compartment depends on the moisture content of the food in it, and the frequency with which the compartment is opened.
- The fresher the product and the higher its quality, the longer it will keep.
- Unwrapped animal and vegetable foods should be stored separately in the drawers. If there is not enough space for them to be stored separately, make sure that they are wrapped. Do not allow different types of meat to come into contact with one another but keep them packaged separately so as to avoid premature bacterial spoilage.
- The following products should not be stored in the BioFresh compartment: hard cheese, potatoes, cold-sensitive vegetables such as cucumbers, aubergines, avocadoes, semiripe tomatoes, zucchini, all cold-sensitive tropical fruits such as pineapples, bananas, grapefruit, melons, mangos, papayas, etc.

Freezer compartment description

Both drawers can be used for freezing of food or storage of frozen food.

The ice cube bin in the upper drawer is intended for ice cubes only.

If you need the whole upper drawer for freezing or storage, the ice cube bin can be removed.

Important: The ice maker will not eject the ice cubes of its tray if the bin has been removed.

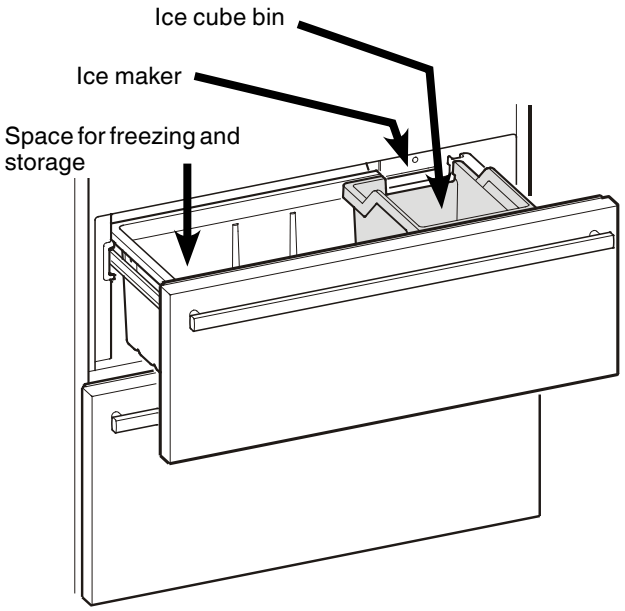

Freezing

Fresh food should be frozen to the core as rapidly as possible. Frozen food can also be given a cold boost. This is provided by the SuperFrost facility.

The maximum amount of food (in kg) which can be frozen in 24 hours is shown on the type plate ("Freezing capacity"). This amount varies according to the model and climate rating.

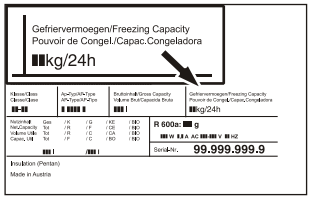

Freezing with SuperFrost

Touch the SuperFrost icon SuperFrost ** briefly so that the ** LED comes on.

- For small amounts of frozen food switch on SuperFrost 6 hours beforehand. For the maximum amount (see freezing capacity on the type plate) you will need to switch it on 24 hours beforehand.
- Then place the fresh food inside the freezer.
- The SuperFrost function switches **off automatically**. Depending on the quantity of food placed in the freezer, this will normally be between 30 and max. 65 hours. The freezing process is now complete, the **SuperFrost LED will go out**.

You should not switch on the SuperFrost function:

- when placing frozen food in the freezer;
- when freezing up to approx. 2 kg fresh food daily.

Notes on freezing and storage

- Always store identical food items together.
- Pack food which you are freezing yourself in quantities appropriate to your household. To ensure that the food freezes right through, the following quantities should not be exceeded per package: fruit, vegetables: up to 1 kg, meat: up to 2.5 kg.
- Pack frozen food in standard freezer bags or reuseable plastic, metal or aluminium containers.
- Do not allow fresh food which is to be frozen to come into contact with food already frozen. Always keep packs dry in order to avoid them sticking together.
- Always write the date and contents on the pack and do not exceed the stated storage time for the food.
- Do not freeze bottles and cans which contain carbonated drinks as they might burst.
- Only take out as much food as is immediately required for thawing. Use food which has been thawed in prepared meals as quickly as possible.

Frozen food can be thawed in the following ways:

– in a fan oven,
– in a microwave oven,
– at room temperature,
– in the refrigerator: the cold given off by the frozen food is used for cooling.

Ice maker

Safety instructions and warnings

- The ice maker is designed exclusively to make ice cubes in quantities required by a household and may only be operated with water suitable for this purpose.
- All repairs and work on the ice maker may only be carried out by customer service personnel or other trained personnel.
- **The first three batches of ice must not be consumed or used. This applies both to using the appliance for the first time and also to using it after it has not been used for a lengthy period of time. This ensures that the water supply is purged.**
- **The manufacturer cannot accept liability for damage caused by a faulty connection to the mains water supply.**
- The ice maker will only work if the combined refrigerator-freezer is connected to the electricity supply. It will only make ice cubes if the freezer compartment is operating.
- Ensure that the drawer is fully closed, as the ice maker can otherwise not produce ice cubes.

Bleeding the ice maker

To ensure that the ice maker works properly, the water supply line must be bled.

IceMaker

- Touch the **IceMaker icon** so that the **IceMaker LED** comes on.
- Open the top freezer drawer.
- Press the **ON/OFF** button on the ice maker housing for approx. 3 seconds. The LED above the button starts flashing.
- Press the button again briefly. The LED flashes more quickly.
- Close the freezer drawer immediately.

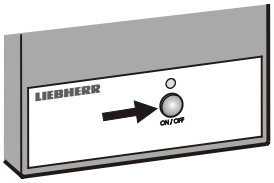

The water supply valve opens for 25 seconds and pumps all the air out of the water supply system.

- Then the ice cube tray of the ice maker must be completely emptied. See the section **Activating the ice maker vacation state**.
- Finally, clean the ice cube bin.

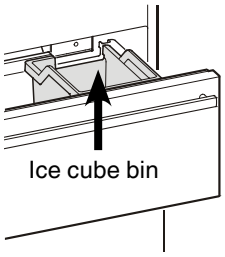

Switching the ice maker on

IceMaker

- Touch the **IceMaker icon** so that the **IceMaker LED** comes on.

After you start the ice maker for the first time, it may take up to 24 hours before the first ice cubes are ready.

The production capacity depends on the temperature inside the freezer compartment. The lower the temperature, the more ice cubes can be produced over a period of time.

The ice cubes fall out of the ice maker into the ice cube bin. When the ice reaches a certain level in the bin, the appliance stops producing ice automatically.

Switching the ice maker off

If you do not need any ice cubes, the ice maker can be switched off independently of the freezer compartment.

IceMaker

- Touch the **IceMaker icon** so that the **IceMaker LED** goes out.

The ice maker can also be switched on and off using the **ON/OFF** button at the ice maker housing.

Press the button for approximately 1 second.

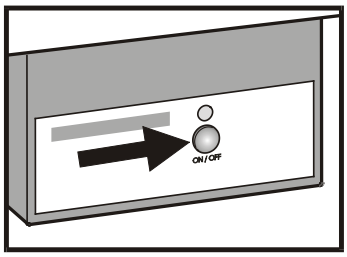

Ice maker vacation state

In case of longer vacations, the ice cube tray should be emptied.

By setting the ice maker into the vacation state, the tray will rotate down and no water remains in the tray.

The freezer drawer must be left open so that the surface of the tray dries up and no mould or unpleasant odours can occur.

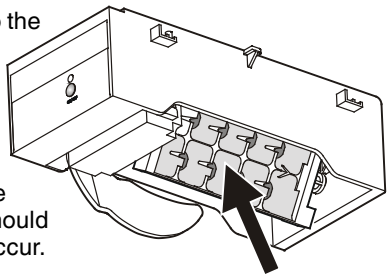

Activating the ice maker vacation state

Be sure the upper freezer drawer is completely closed and the ice cube bin is installed correctly.

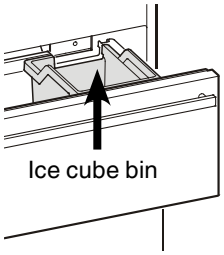

- Activate setup mode by touching the **SuperFrost** icon for 5 seconds.
- Touch the freezer compartment **Down** icon until appears in the display.
- Touch the **SuperFrost** icon.
- The display reads

or

depending on whether the ice maker is switched on or off.

- Touch the freezer compartment **Down** icon.
- The display reads

- Touch the **SuperFrost** icon.
- The digit flashes.

The ice cube tray rotates down.

When the interior temperature appears in the display, the tray is in the down position and the ice maker is switched off automatically.

Defrosting

Refrigerator compartment

The refrigerator compartment defrosts automatically. The water that forms on the rear wall drains into a reservoir at the back of the appliance and evaporates automatically through the compressor heat.

Freezer compartment

The NoFrost system automatically defrosts the appliance.
Any moisture arising collects on the evaporator and freezes, and is periodically defrosted and evaporated.

Cleaning

Before cleaning always switch off the appliance. Pull out the mains plug or switch off or unscrew the fuse.

Clean the inside, equipment and outer walls with lukewarm water and a little detergent. Do not use abrasive or acid cleaners or chemical solvents.

Do not use steam cleaners because of the risk of injury and damage.

- Ensure that no cleaning water penetrates into the electrical components or ventilation grille.
- Dry all parts well with a cloth.
- Do not damage or remove the type plate on the inside of the appliance. It is very important for servicing purposes.
- Use a commercially available stainless-steel cleaning agent for **stainless-steel appliances**.
- In order to achieve best possible protection, apply a stainless-steel care agent uniformly in grinding direction after cleaning. Points which are darker at the start and a more intensive coloration of the stainless-steel surface are normal.
- Do not use abrasive sponges or scourers, do not use concentrated cleaning agents and never use cleaning agents containing sand, chloride or acid or chemical solvents, as these would damage the surfaces and could cause corrosion.

Removing the freezer drawer containers

- Open the refrigerator door.
- Pull out the freezer drawer.
- Pull the container upwards by the right and left corners (**1**).
- Push the container backwards (**2**).

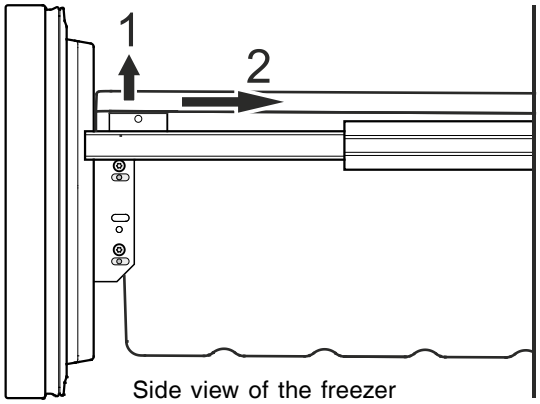

Side view of the freezer drawer pulled out

- Tilt the container at an angle and remove.

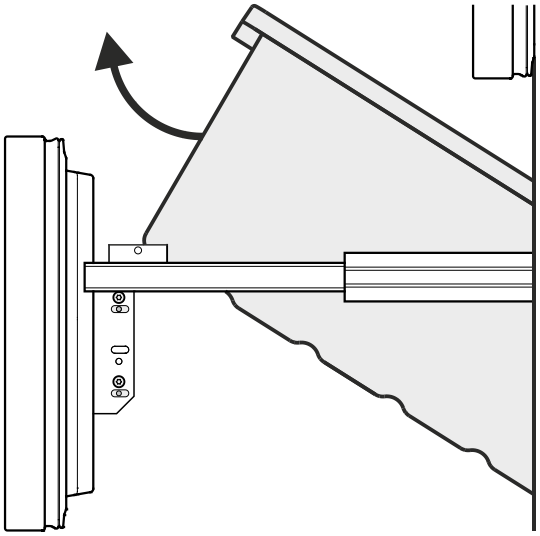

- Install the container in the reverse order.

Cleaning the dust filter

1. **Disconnect the appliance from the mains.**
2. Pull the bottom freezer drawer right out.
3. Unscrew the ventilation grille.

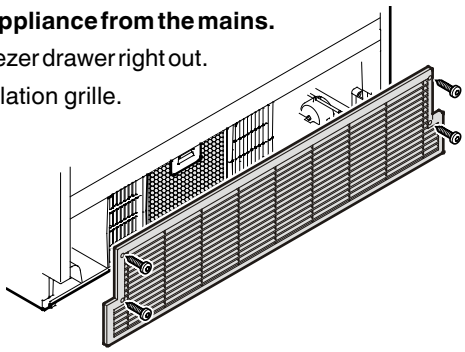

4. Push down the button on the filter, tilt the filter forwards and remove.

The dust filter can be washed in a dishwasher or by hand using water and detergent.

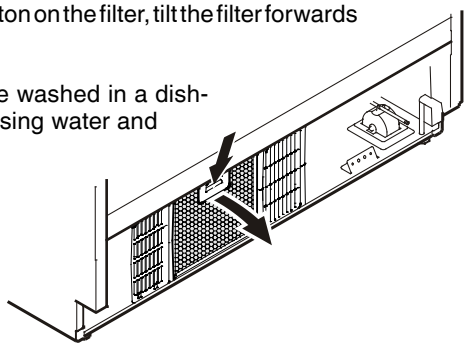

5. Dry the filter and then, in reverse order, replace it.
6. Re-attach the ventilation grille.
7. Cancel the dust filter LED in the display. See **Setup mode**, = Confirm dust filter cleaning.

Malfunctions

Your appliance is designed and manufactured for a lengthy, reliable operating life with no malfunctions. If a malfunction nonetheless occurs during operation, check whether it is due to an operating error. Please note that even during the warranty period the resultant servicing costs in this case will have to be borne by the owner.

You may be able to rectify the following faults by checking the possible causes yourself:

Appliance does not function:
– Is the appliance switched on?
– Is the plug correctly fitted in the mains socket?
– Is the fuse intact?

Loud running noise:
– Is the appliance set up firmly on the floor?
– Does the appliance cause nearby items of furniture or objects to vibrate? Please note that noises caused by the refrigerant circuit cannot be avoided.

The temperature is not cold enough:
– Is the temperature setting correct (see "Setting the temperature")?
– Have excessive amounts of fresh food been placed in the appliance?
– Does the separately installed thermometer show the correct reading?
– Is the ventilation system working properly?
– Is the appliance set up too close to a heat source?

If none of the above causes apply and you cannot rectify the fault yourself, contact the nearest customer service department stating the type designation ❶, service number ❷ and appliance number ❸ as indicated on the type plate.

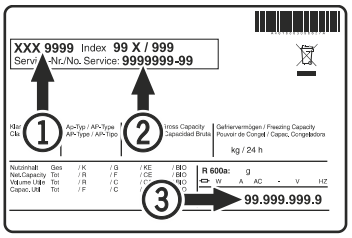

The position of the type plate is shown in the section entitled **Description of the appliance**.

Shutting your appliance down

If your appliance is to be shut down for any length of time, switch it off and disconnect the plug or switch off or unscrew the fuse. Clean the appliance and leave the door open in order to prevent unpleasant smells.

The appliance complies with the relevant safety regulations and EC Directives 2004/108/EC and 2006/95/EC.

All types and models are subject to continuous improvement and the manufacturer therefore reserves the right to make modifications to the shape, equipment and technology.