LG
Life's Good

OWNER'S MANUAL

High Power Speaker System

Please read this manual carefully before operating your set and retain it for future reference.

MODEL
RK3

MFL70041952

www.lg.com

Copyright © 2018 LG Electronics Inc. All Rights Reserved.

Safety Information

CAUTION: TO REDUCE THE RISK OF ELECTRIC SHOCK DO NOT REMOVE COVER (OR BACK) NO USER-SERVICEABLE PARTS INSIDE REFER SERVICING TO QUALIFIED SERVICE PERSONNEL.

This lightning flash with arrowhead symbol within an equilateral triangle is intended to alert the user to the presence of uninsulated dangerous voltage within the product's enclosure that may be of sufficient magnitude to constitute a risk of electric shock to persons.

The exclamation point within an equilateral triangle is intended to alert the user to the presence of important operating and maintenance (servicing) instructions in the literature accompanying the product.

WARNING: TO PREVENT FIRE OR ELECTRIC SHOCK HAZARD, DO NOT EXPOSE THIS PRODUCT TO RAIN OR MOISTURE.

CAUTION: The apparatus should not be exposed to water (dripping or splashing) and no objects filled with liquids, such as vases, should be placed on the apparatus.

WARNING: Do not install this equipment in a confined space such as a book case or similar unit.

CAUTION: Do not use high voltage products around this product. (ex. Electrical swatter) This product may malfunction due to electrical shock.

CAUTION: Do not block any ventilation openings. Install in accordance with the manufacturer's instructions.
Slots and openings in the cabinet are provided for ventilation and to ensure reliable operation of the product and to protect it from over heating. The openings shall be never be blocked by placing the product on a bed, sofa, rug or other similar surface. This product should not be placed in a built-in installation such as a bookcase or rack unless proper ventilation is provided or the manufacturer's instruction has been adhered to.

NOTICE: For safety marking information including product identification and supply ratings, please refer to the main label on the bottom or the other surface of the product.

CAUTION concerning the Power Cord

The Power Plug is the disconnecting device. In case of an emergency, the Power Plug must remain readily accessible.

Check the specification page of this owner's manual to be certain of the current requirements.

Do not overload wall outlets. Overloaded wall outlets, loose or damaged wall outlets, extension cords, frayed power cords, or damaged or cracked wire insulation are dangerous. Any of these conditions could result in electric shock or fire. Periodically examine the cord of your device, and if its appearance indicates damage or deterioration, unplug it, discontinue use of the device, and have the cord replaced with an exact replacement part by an authorized service center. Protect the power cord from physical or mechanical abuse, such as being twisted, kinked, pinched, closed in a door, or walked upon. Pay particular attention to plugs, wall outlets, and the point where the cord exits the device.

This device is equipped with a portable battery or accumulator.

How to Safely remove the battery or the battery pack from the equipment: To remove the old battery or battery pack, follow the assembly steps in reverse order. To prevent contamination of the environment and bring on possible threat to human and animal health, the old battery or the battery put it in the appropriate container at designated collection points. Do not dispose of batteries or battery pack together with other waste. It is recommended that you use local, free reimbursement systems batteries and accumulators. The battery shall not be exposed to excessive heat such as sunshine, fire or the like.

CAUTION: No naked flame sources, such as lighted candles, should be placed on the apparatus.

Symbols

~	Refers to alternating current(AC).
⎓	Refers to direct current(DC).
⧈	Refers to class II equipment.
⏻	Refers to stand-by.
I	Refers to "ON" (power).
ϟ	Refers to dangerous voltage.

⚠ Caution

Splash-proof (IPX4)

This unit is splash-proof according to IPX4.
IPX4 is a splash-proof for splashing water.
This unit is splash-proof speaker but it can be damaged when you used under water.

- Do not use unit under water or other liquid.
- Do not spray water on the unit purposely.
- When you don't use the unit, close the port cover securely.
- When battery is charging, do not expose the unit to water.
- When exposed to water, wipe off it with a soft dry cloth.

Precautions on handling a battery

- This unit has a built-in valve regulated lead-acid rechargeable battery. (12 V / 7.0 Ah)
- Do not use the battery in a closed room or near fire.
- Charge the battery under the charging condition specified.
- If any corrosion of the terminals, leakage or deformation of the case of the battery is found, do not use the battery.
- If the battery leaks, while protecting your hands or clothing, remove the battery from the device and should be extremely careful not to infect the skin or eyes.
- If the battery leaks and the liquid inside spills on the skin or clothing, immediately wash it off with plenty of clean water.
  If the liquid splashes into eyes, immediately flush the eyes with plenty of clean water and consult a doctor.
- Avoid mixed usage of batteries differing in type, manufacturer or history of use.
- Do not throw the battery in fire nor heat the battery.
- Do not short of battery terminals.
- Do not attempt to disassemble, remodel or destroy the battery.
- Do not place the battery near a child.
- The battery can be replaced. If you need to charge your battery more and more frequently, it might be time to replace it. The battery should be serviced by LG Electronics customer care center.
- Charge fully before storing a battery which has not been in use for a long period and turn ON/OFF switch off (OFF). Store the battery in a cool, dry place.
- During storage of the battery, charge it at least once every three months. If the battery is stored for a long period without being charged, its battery life may be shortened.
- The used battery must be recycled or disposed of separately from household waste.

Table of Contents

1 Getting Started

2 Safety Information
3 – Precautions on handling a battery
6 Unique Features
6 Playable file Requirement
6 – Music file requirement
6 – Compatible USB Devices
6 – USB device requirement
7 Top Panel
8 Rear Panel
9 Carrying the unit
10 Power Connection
11 Charging Battery

2 Connecting

12 Optional Equipment Connection
12 – PORT IN. Connection
12 – Listening to music from your portable player
12 – USB Connection
13 Basic Operations
13 – USB Operations

3 Operating

14 Using BLUETOOTH® wireless technology
14 – Listening to music stored on the Bluetooth devices
17 Radio Operations
17 – Listening to the radio
17 – Presetting the Radio Stations
17 – Deleting all the saved stations
18 Sound adjustment
18 – Setting the sound mode
18 Other Operations
18 – DEMO
19 – Using Microphone
21 – Auto power down
22 – AUTO POWER On
22 – Auto function change

4 Troubleshooting

23 Troubleshooting
23 – General

5 Appendix

24 General specifications
25 Maintenance
25 – Handling the Unit
25 Trademarks and Licenses

Unique Features

Bluetooth®

Listens to music stored on your **Bluetooth** device.

Portable In

Listens to music from your portable device. (MP3, Notebook, etc.)

Carrying the unit

The unit has wheels and a handle so you can easily move the unit.

Playable file Requirement

Music file requirement

MP3/WMA file compatibility with this unit is limited as follows.

- Sampling frequency : within 32 to 48 kHz (MP3), within 32 to 48 kHz (WMA)
- Bit rate : within 32 to 320 kbps (MP3), 40 to 192 kbps (WMA)
- Maximum files : 999
- Maximum folders : 99
- File extensions : ".mp3"/ ".wma"
- Certain MP3/WMA files may not be played depending on the type or format of the file.

Compatible USB Devices

- MP3 Player : Flash type MP3 player.
- USB Flash Drive :
  Devices that support USB2.0 or USB1.1.
- The USB function of this unit does not support all USB devices.

USB device requirement

- Devices which require additional program installation when you have connected it to a computer, are not supported.
- Do not extract the USB device while in operation.
- For a large capacity USB, it may take longer than a few minute to be searched.
- To prevent data loss, back up all data.
- If you use a USB extension cable or USB hub, the USB device is not recognized.
- Using NTFS file system is not supported. (Only FAT(16/ 32) file system is supported.)
- This unit recognizes up to 999 files.
- External HDD, SSD, Card readers, Locked devices, or hard type USB devices are not supported.
- USB port of the unit cannot be connected to PC. The unit cannot be used as a storage device.
- Some USB may not work with this unit.

Top Panel

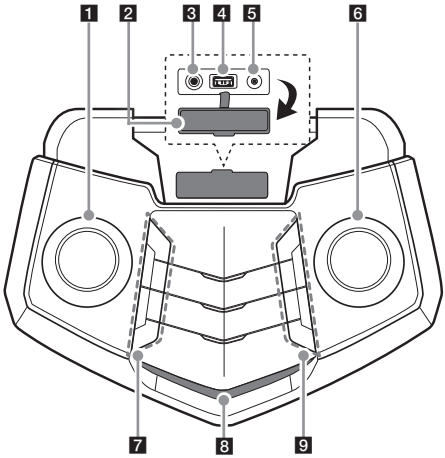

1 **MIC VOL. ▼**
Adjusts microphone volume level.

2 Port cover

Note

When you don't use the unit, close the port cover securely.

3 **MIC IN.**
Connects a microphone.

4 USB port
You can play sound files by connecting the USB device.

5 **PORT** (Portable) **IN.**
Connects a portable device.

6 **▼ MAIN VOL.**
Adjusts speaker volume level.

7 ⏻ (Standby)
Turns the power on or off.

ECHO / DEMO
- Selects ECHO mode.
- In power off status, if you press **ECHO / DEMO**, shows DEMO mode.

VOCAL EFFECTS
Selects VOCAL EFFECTS mode.

VOICE CANCELLER
You can enjoy the function while playing the music, by reducing singer vocal of music in the various source.

♯/♭ (KEY CHANGER)
Changes the key to suit your vocal range.

8 Display window

9 **F** (Function)
Selects the function and input source.

⏯ (Play/Pause)
Starts or pauses playback.

PRESET / REPEAT
- Chooses a preset number for a radio station. / Stores radio stations by pressing and holding.
- Listens to your files repeatedly or randomly.
- Sees the name of connected all **Bluetooth** device in Bluetooth mode.

SOUND EFFECT / BASS BLAST(or **BASS BLAST+**)
- Chooses sound impressions.
- Press and hold to select BASS (or BASS+) effect directly.

⏮/⏭
- Skips Fast backward or Forward. / Searches for a section within a file by pressing and holding.
- Selects the radio stations.

Rear Panel

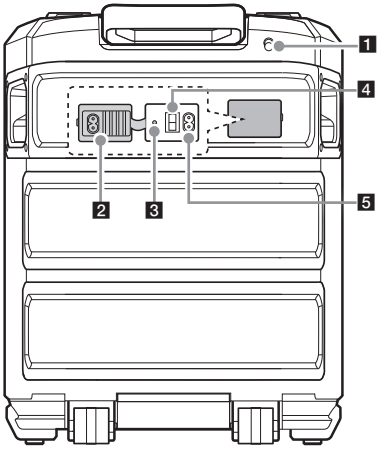

1 FM antenna

2 Port cover

Note

When you don't use the unit, close the port cover securely.

3 Battery charging indicator

4 Power ON / OFF switch
Switches the unit ON or OFF.
(Battery can be charged even when this unit is in off (OFF) status.)

5 AC in socket

Note

Fully charge the device before using.

Carrying the unit

The unit has wheels and a handle so you can easily move the unit.

1. Press the lock button on the handle.

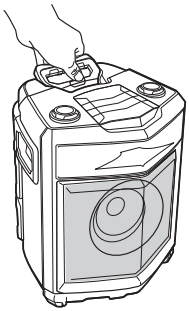

2. Pull the handle up.

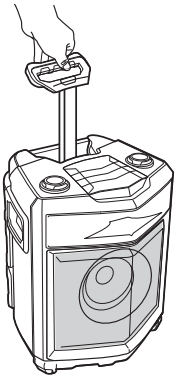

Note

When you fix the handle, press the lock button and push the handle.

Caution

- Do not shake the handle to hard. Otherwise it may result in the unit will be damaged.
- Do not hang heavy things on the handle. Otherwise it may result in the unit will be damaged.
- Do not draw the unit on the unpaved road or the stair.
- Be careful it does not drop the unit when you carry it.
- Carry the unit, after then disconnect the connected cables.
- Do not step or sit on the unit. Otherwise this unit may fall down and causing personal injury.
- Do not place the unit on an unstable position and place the unit at a safe distance from the child's reach.
- Be careful that the unit should not fall down. Otherwise it may result in malfunction and causing personal injury and/ or property damage.
- Fix the handle when you use the unit.

Power Connection

Connect this unit to the power supply with the supplied AC power cord.

1. Connect the supplied AC power cord to this unit.
2. Plug the AC power cord into an AC outlet.

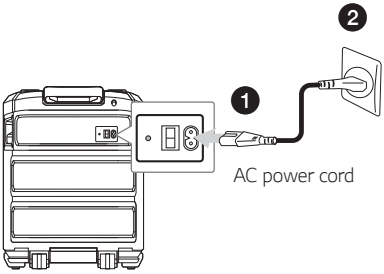

3. Turn ON/OFF Switch on (ON).

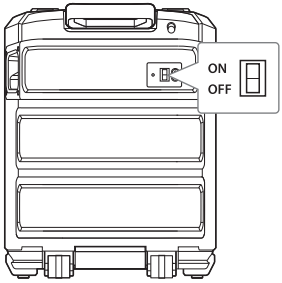

Note

- When you turn ON/OFF Switch on (ON), this unit turns on even if this unit has been turned off. If the battery level is very low, this unit does not turn on even if you turn ON/OFF switch on (ON).
- When the battery level is low, this unit displays LOW BATTERY frequently. And if the battery level becomes even lower, this unit turns off automatically.
- Previous setting may not be saved when you turn ON/OFF switch off (OFF).
- Previous setting may not be saved when the unit's power is shut off due to low battery.

Charging Battery

This unit has a built-in battery.

- By connecting AC power, battery will start charging.
- If Battery charging indicator is in red, this means that battery is charging now.
- If the battery charging indicator is in green, this means that battery charging is completed.
  For efficient performance of battery, it is recommeded fully charging the device until the green LED goes off.
- Charge battery for about 11 hours before you start using this unit for the first time.

Note

- Operating time is approx. 13 hours. (Based on fully charging the battery and continuous playback using 50 % volume level.) It may vary depending on the battery status and operational conditions.
- If you are listening to the music while charging, it will take longer to charge.
- Charge the battery fully during the recommended time after discharge.

Optional Equipment Connection

PORT IN. Connection

Connect an output (earphone or line out) of portable device (MP3 or PMP etc) to the **PORT IN.** connector.

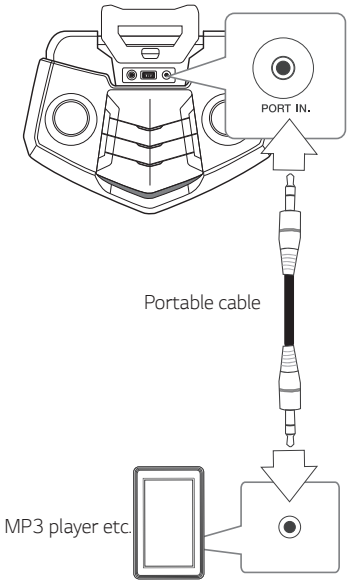

Listening to music from your portable player

The unit can be used to play the music from many types of portable player.

1. Connect the portable player to the **PORT IN.** connector of the unit.
2. Turn the power on by pressing ⏻.
3. Press **F** to select PORTABLE function.
4. Turn on the portable player and start it playing.

Note

Automatically switches to the PORTABLE function when you connect the portable device to the **PORT IN.** connector.

USB Connection

Connect a USB device (or MP3 player, etc.) to the USB ports on the unit.

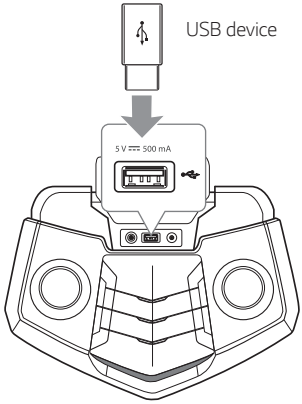

Note

Removing the USB device from the unit :

1. Choose a different function.
2. Remove the USB device from the unit.

Basic Operations

USB Operations

1. Connect the USB device to the USB port.
2. Select USB function by pressing **F** on the unit.

To	Do this
Playback	Press ⏯ on the unit.
Pause	Press ⏯ on the unit during playback.
Searching for a section within a file	Press and hold ⏮/⏭ on the unit during playback and release it at the point you want to listen to.
Skipping to the next/ previous file	- In pause status, Press ⏮/⏭ on the unit to go to the next/previous file. - During Playback, Press ⏭ on the unit to go to the next file. Playing less than 2 seconds, press ⏮ on the unit to go to the previous file. Playing after 3 seconds, press ⏮ on the unit to go to the beginning of the file.
Playing repeatedly or randomly	Press **PRESET/REPEAT** on the unit repeatedly. **OFF ➡ ONE 🔁 ➡ ALL 🔁 ➡ SHUFFLE 🔀**

Note

- Even after restarting the unit or switching one function to another, you can listen to music from the point where it's last been played.
- The resume point may be cleared when in the cases below
  - Removing the USB device from the unit.

Using BLUETOOTH® wireless technology

About Bluetooth

Bluetooth is wireless communication technology for short range connection.

The sound may be interrupted when the connection interfered by the other electronic wave or you connect the **Bluetooth** in the other rooms.

Connecting individual devices under **Bluetooth** wireless technology does not incur any charges. A mobile phone with **Bluetooth** wireless technology can be operated via the Cascade if the connection was made via **Bluetooth** wireless technology.

- Available Devices : Smart phone, MP3, Notebook, etc.
- Version : 4.0
- Codec : SBC

Bluetooth Profiles

In order to use **Bluetooth** wireless technology, devices must be able to interpret certain profiles. This unit is compatible with following profile.

A2DP (Advanced Audio Distribution Profile)

Listening to music stored on the Bluetooth devices

Pairing your unit and Bluetooth device

Before you start the pairing procedure, make sure the **Bluetooth** feature is activated on your **Bluetooth** device. Refer to your **Bluetooth** device's user guide. Once a pairing operation is performed, it does not need to be performed again.

1. Turn on the unit.

Note

When Bluetooth connection lock is activated, you can search **Bluetooth** device in BT function.

2. Operate the **Bluetooth** device and perform the pairing operation. When searching for this unit with the **Bluetooth** device, a list of the devices found may appear in the **Bluetooth** device display depending on the type of **Bluetooth** device. Your unit appears as "LG-RK3(XX)".

Note

- XX means the last two digits of **Bluetooth** address. For example, if your unit has a **Bluetooth** address such as 9C:02:98:4A:F7:08, you will see "LG-RK3(08)" on your **Bluetooth** device.
- Depending on the **Bluetooth** device type, some devices may have a different pairing process. Enter the PIN code (0000) as needed.
- You can connect this unit with up to 2 **Bluetooth** devices simultaneously using the same method as described above, only in the **Bluetooth** function.
- The multi pairing connection is only supported on Android devices. (Multi pairing connection may not be supported depending on the connected device specifications.)
- Removable/detachable **Bluetooth** devices (Ex: Dongle etc.) will not support multi pairing.

3. When this unit is successfully connected with your **Bluetooth** device, "PAIRED" appears on the display window and change to **Bluetooth** device name soon.

Note

- "PAIRED" will momentarily appear on the display when you connect other devices for multi pairing.
- If the device name is unavailable, "_" will be displayed.

4. Listen to music.
   To play a music stored on your **Bluetooth** device, refer to your **Bluetooth** device's user guide.

Note

- When using **Bluetooth®** technology, you have to make a connection between the unit and the **Bluetooth** device as close as possible and keep the distance.
  However, it may not work well in certain situations as described below :
  - There is a obstacle between the unit and the **Bluetooth** device.
  - There is a device using same frequency with **Bluetooth®** technology such as a medical equipment, a microwave or a wireless LAN device.
- You should connect your **Bluetooth** device to this unit again when you restart it.
- Even if this unit connected up to 2 **Bluetooth** devices in the **Bluetooth** mode, you can play and control music by using only one of the connected devices.

Bluetooth connection lock (BT LOCK)

You can limit **Bluetooth** connection to only BT (**Bluetooth**) function to prevent unintended **Bluetooth** connection.

To turn on this function, press and hold ▷II on the unit for about 5 seconds in BT (**Bluetooth**) function. "BT LOCK" appears then you can limit **Bluetooth** connection.

To turn off this function, press and hold ▷II on the unit for about 5 seconds in BT (**Bluetooth**) function. "BT UNLOCK" appears.

Note

- The sound may be interrupted when the connection has interference from other electronic devices.
- Depending on the type of the device, you may not be able to use the **Bluetooth** function.
- You can enjoy wireless system using phone, MP3, Notebook, etc.
- The more distance between the unit and the **Bluetooth** device, the lower the sound quality becomes.
- **Bluetooth** connection will be disconnected when the unit is turned off or the **Bluetooth** device gets far from the unit.
- When **Bluetooth** connection is disconnected, connect the **Bluetooth** device to the unit again.
- When a **Bluetooth** device is not connected, "READY" appears on the display window.
- When you use the **Bluetooth** function, adjust the volume to a proper level on the **Bluetooth** device.
- When entering **Bluetooth** function, this unit automatically connect to **Bluetooth** device which is connected the last.
  (Auto connection may not be supported depending on the connected device specifications.)

Radio Operations

Pull the FM antenna out and adjust the angle and direction for better reception.

Listening to the radio

1. Press **F** on the unit until FM appears in the display window.
   The last received station is tuned in.
2. Auto tuning :
   Press and hold ⏮/⏭ on the unit for about two seconds until the frequency indication starts to change, then release. Scanning stops when the unit tunes in a station.

   Or

   Manual tuning :
   Press ⏮/⏭ on the unit repeatedly.
3. Adjust the volume by rotating **▼MAIN VOL.** (volume) knob on the unit.

Presetting the Radio Stations

You can preset 10 stations for FM.

Before tuning, make sure to turn down the volume.

1. Press **F** on the unit until FM appears in the display window.
2. Select the desired frequency by pressing ⏮/⏭ on the unit.
3. Press and hold **PRESET/REPEAT** on the unit for more than 2 seconds. A preset number will blink in the display window.
4. Press ⏮/⏭ on the unit to select the preset number you want.
5. Press **PRESET/REPEAT** on the unit.
   The station is stored.
6. Repeat steps 2 to 5 to store other stations.
7. To listen a preset station, press **PRESET/REPEAT** on the unit.

Deleting all the saved stations

1. Press and hold **PRESET/REPEAT** on the unit for five seconds.
   "DEL" and "ALL" will flash up alternately on the unit display.
   If there is no saved radio stations, it displays NONE.
2. Press **PRESET/REPEAT** on the unit to erase all the saved radio stations.

Sound adjustment

Setting the sound mode

This system has a number of pre-set surround sound fields. The displayed items for the Equalizer may be different depending on sound sources and effects.

You can select a desired sound mode by using **SOUND EFFECT / BASS BLAST** (or **BASS BLAST+**) on the unit.

On Display	Description
BASS (BASS BLAST) or BASS+ (BASS BLAST+)	Reinforces the bass and powerful sound.
POP CLASSIC ROCK JAZZ	This program lends an enthusiastic atmosphere to the sound, giving you the feeling you are at an actual rock, pop, jazz or classic concert.
STANDARD	You can enjoy optimized sound.

Note

By pressing and holding **SOUND EFFECT / BASS BLAST** (or **BASS BLAST+**) on the unit, you can directly select BASS (BASS BLAST) or BASS+ (BASS BLAST+) effect.

Other Operations

DEMO

In the power off state, press **ECHO / DEMO** on the unit once. The unit will power on and display the each of functions in the display window.
To cancel the DEMO function, press **ECHO / DEMO** on the unit once more.

Note

You can enjoy other functions during the DEMO, the DEMO will temporarily pause.

- Without input key in 10 sec, the DEMO will playback automatically.

Using Microphone

1. Connect your microphone to the MIC jack.
2. Play the music you want.
3. Sing along with the accompaniment.
   Adjust the microphone volume by rotating **MIC VOL. ▼** clockwise or counterclockwise on the unit.

Note

- When not using the microphone, set the **MIC** volume to minimum or turn off the MIC and remove the microphone from the MIC jack.
- If the microphone is set too near the speaker, a howling sound may be produced. In this case, move the microphone away from the speaker or decrease the sound level by rotating **MIC VOL. ▼**
- If sound through the microphone is extremely loud, it may be distorted. In this case, rotate **MIC VOL. ▼** to minimum.
- You can give an echo effect to the sound from the microphones by pressing **ECHO / DEMO**

ECHO

When you connect your microphone to the MIC jack, you can give an echo effect to the sound from the microphones by pressing **ECHO / DEMO**.

ECHO 1 → ECHO 2 → ECHO OFF

Note

- If a microphone is not connected, "INSERT MIC" appears in the display window.
- If you press **VOCAL EFFECTS** button on ECHO mode, after backing up current ECHO, turn off ECHO mode and operate VOCAL EFFECTS mode.
  Press **ECHO / DEMO** again, after backing up current VOCAL EFFECTS, operate ECHO mode.

VOICE CANCELLER

You can enjoy the function while playing the music, by reducing singer vocal of music in the various source.

Press the **VOICE CANCELLER** and "ON" will appear in display window.

To cancel it, press **VOICE CANCELLER** again.

The quality of the VOICE CANCELLER may be different depending on the recording conditions of music files.

Note

- This function is available USB or BT (**Bluetooth**) Function.
- If the function is not available, "NOT SUPPORT" appears in the display window.
- This function is available to use only when a microphone is connected.
- If a microphone is not connected, "INSERT MIC" is scrolled in the display window.
- It is not available on the mono source.
- To initialize it, change the Function or disconnect the microphone.
- This function may not be initialized depending on the status of connected devices.

KEY CHANGER

You can adjust the key to 9 steps (4 steps higher, 4 steps lower and the original key).

- To sharp the key one by one, press **#** (**KEY CHANGER**) repeatedly during playback.
- To flatten the key one by one, press ♭ (**KEY CHANGER**) repeatedly during playback.

Note

- This function is available USB or BT (**Bluetooth**) Function.
- If a microphone is not connected, "INSERT MIC" is scrolled in the display window.
- To initialize it, change the Function, disconnect the microphone or change the music.
- This function may not be initialized depending on the status of connected devices.
- If the function is not available, "NOT SUPPORT" appears in the display window.

VOCAL EFFECTS

When you connect your microphone to the MIC jack, you can enjoy karaoke function by changing voice in the various source.

To select various mode, press **VOCAL EFFECTS** repeatedly or press **VOCAL EFFECTS** then turn **MAIN VOL.** ▼ on the unit when vocal effects mode appears in the display window.

BASS → SOPRANO → HELIUM → ROBOT → DUET MAN → DUET WOMAN → BASS ECHO1 → SOPRANO ECHO1 → HELIUM ECHO1 → ROBOT ECHO1 → DUET MAN1 → DUET WOMAN1 → BASS ECHO2 → SOPRANO ECHO2 → HELIUM ECHO2 → ROBOT ECHO2 → DUET MAN2 → DUET WOMAN2

Note

- If a microphone is not connected, "INSERT MIC" appears in the display window.
- If you press **KEY CHANGER**, or **ECHO / DEMO** on the unit on VOCAL EFFECTS mode, after backing up current VOCAL EFFECTS, turn off VOCAL EFFECTS mode and operate KEY CHANGER or ECHO mode.
- To turn off VOCAL EFFECTS mode, press and hold **VOCAL EFFECTS**.

Auto power down

This unit will turn itself off to save electricity in the case were the main unit is not connected to an external device and is not used for 15 minutes.
The unit will also turn itself off after six hours if the main unit has been connected to another device using the analog inputs.

AUTO POWER On

This unit automatically turns on by an input source : **Bluetooth**

If you try to connect your **Bluetooth** device, this unit turns on and connects your **Bluetooth** device. You can play your music.

Note

- Depending on the connected device, this function may not operate.
- Depending on the connected device, the unit turns on but **Bluetooth** function may not be connected.
- If you disconnect **Bluetooth** connection by this unit, some **Bluetooth** devices try to connect to the unit continually. Therefore it is recommended to disconnect the connection before turning off the unit.
- If you have already paired with this unit, automatically this unit can turn on by an input source when this unit is turned off.
- If the ON/OFF switch on the rear panel is set to off (OFF), AUTO POWER On cannot be operated.

Auto function change

This unit recognizes input signals such as **Bluetooth** or connected portable device, and then changes suitable function automatically.

When you try to connect Bluetooth device

When you try to connect your **Bluetooth** device to this unit, **Bluetooth** function is selected.
Play your music on the **Bluetooth** device.

When PORT IN. connection is connected

When you connect the portable device to the **PORT IN.** connector, PORTABLE function is selected.
Play your music on the portable device.

Note

- This function only works with devices that were previously connected.
- If the **Bluetooth** connection lock function is set, **Bluetooth** connection will be only available on **Bluetooth** function.

Troubleshooting

General

Problem	Cause & Solution
The unit does not work properly.	• Turn off the power of this unit and the connected external device (TV, Woofer, DVD-player, Amplifier, etc.) and turn them on again. • Disconnect the power cord of this unit and the connected external device (TV, Woofer, DVD-player, Amplifier, etc.) and then try connecting again. • Previous setting may not be saved when device power is shut off. • Turn ON/OFF switch off (OFF) and on (ON).
No Power.	• The battery is discharged. Recharge the battery. • Check whether the ON/OFF switch is on (ON). • The power cord is not plugged in. Plug in the power cord. • Check whether electricity failed. Check the condition by operating other electronic devices.
No sound.	• Check whether you select right function. Press function button and check the selected function.
Radio stations cannot be tuned in properly.	• The antenna is positioned poorly. Adjust the angle and direction for better reception. • The signal strength of the radio station is too weak. Tune to the station manually. • No stations have been preset or preset stations have been cleared (when tuning by scanning preset channels). Preset some radio stations, see page 17 for details.

General specifications

General	
Power requirements	Refer to the main label on the unit.
Power consumption	Refer to the main label on the unit.
Dimensions (W x H x D)	Approx. 370 mm x 480.5 mm x 310 mm
Operating temperature	5 °C to 35 °C
Operating humidity	5 % to 60 %
Splash-proof	IPX4

Inputs	
Portable in (PORT. IN)	2.0 Vrms (3.5 mm stereo jack) x 1
Microphone (MIC)	Sensitivity 30 mV (1 kHz), 6.3 mm jack x 1

Tuner	
FM Tuning Range	87,5 to 108.0 MHz or 87,50 to 108,00 MHz

System	
Frequency Response	40 to 20,000 Hz
Signal-to-noise ratio	More than 75 dB
Dynamic range	More than 70 dB
Bus Power Supply (USB)	5 V ⎓ 500 mA

Battery	
Battery type	12 V/7.0 Ah (Valve Regulated Lead-Acid rechargeable battery)
Operating time	Approx. 13 hours (Based on fully charging the battery and continuous playback using 50 % volume level.) It may vary depending on the battery status and operational conditions.
Charging time	Approx. 11 hours It may vary depending on the battery status and operational conditions.

- Design and specifications are subject to change without notice.

Maintenance

Handling the Unit

When shipping the unit

Please save the original shipping carton and packing materials. If you need to ship the unit, for maximum protection, re-pack the unit as it was originally packed at the factory.

Keeping the exterior surfaces clean

Do not use volatile liquids such as insecticide spray near the unit. Wiping with strong pressure may damage the surface. Do not leave rubber or plastic products in contact with the unit for a long period of time.

Cleaning the unit

To clean the player, use a soft, dry cloth. If the surfaces are extremely dirty, use a soft cloth lightly moistened with a mild detergent solution. Do not use strong solvents such as alcohol, benzine, or thinner, as these might damage the surface of the unit.

Trademarks and Licenses

The **Bluetooth®** word mark and logos are owned by the Bluetooth SIG, Inc. and any use of such marks by LG Electronics is under license.

Other trademarks and trade names are those of their respective owners.

LG
Life's Good